CAUTION - READ MANUAL & ALL NOTES BEFORE INSTALLING OR OPERATING CONTROL. SEE NOTE 1.

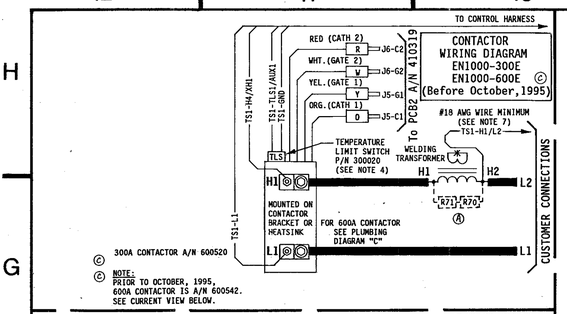

NOTE:
PRIOR TO OCTOBER, 1995, 600A CONTACTOR IS A/N 600542. SEE CURRENT VIEW BELOW.

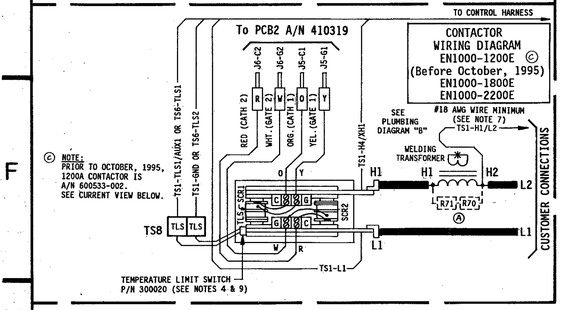

NOTE:
PRIOR TO OCTOBER, 1995, 1200A CONTACTOR IS A/N 600533-002. SEE CURRENT VIEW BELOW.

NOTES:

1. It is recommended that control wiring (i.e.: initiation, pressure switch, etc.) be physically separated from the high voltage wiring (115 volts or higher).

2. For 380 VAC Operation - Use Jumpers #3 on TS1.

DO NOT CHANGE JUMPERS!

For 230, 460, & 575 VAC Operation - Consult Factory.

3. For Single Stage Pilot Operation - Connect pilot switch to TS1-FS3 & TS1-GND. No jumpers required across TS1-FS1 & TS1-GND.

   For Two Stage Pilot Operation - Connect 1st stage pilot switch to TS1-FS1 & TS1-GND. Connect 2nd stage pilot switch to TS1-FS3 & TS1-GND.

   For DUAL COUNT/DUAL CURRENT (Dual Weld/Dual Heat) or TRIPLE COUNT/TRIPLE CURRENT (Triple Weld/Triple Heat) or External Schedule Selection, SEE MANUAL.

4. EN1000-SERIES "E" Cabinet:
   ENTRON supplies Temperature Limit Switch (TLS) P/N 300020 and provides connections to TS1-TLS1/AUX1 & TS1-GND. Jumper not required between TS1-TLS1/AUX1 & TS1-GND.
   NOTE: TLS SCR will open at temperatures greater than or equal to 150° F.

5. When external valve power is supplied to the control. Remove and insulate leads TS3-VL1 & TS3-VL2 on the Terminal Strip Board (PCB2), (from T3-X1 & T3-X2). Connect external AC power supply (24-240 VAC) to TS1-VL1 & TS1-SV2/SV4/VL2.
   CAUTION: Do not overtighten TS3.

6. VALVE 3 OUTPUT USAGE:
   TS1-SV5 & TS1-SV6 (Valve 3) can be used for either a Valve output or a Process output.
   When TS1-SV5 & TS1-SV6 is used as a Valve output use Jumper "A" on TS3.
   When TS1-SV5 & TS1-SV6 is used as a Process output use Jumper "B" on TS3.
   CAUTION: Do not overtighten TS3

   WARNING: Use of Jumper "B" bypasses control relay contacts to allow a process output without an initiation. SEE MANUAL.

7. Connect TS1-H1/L2 to L2/H2 side of Welding Transformer Primary.

8. When Optional Program Lockout is specified by customer. Dial Plate A/N 600528-001 replaces A/N 600528. Add Switch P/N 600531-001 & remove Hole Plug P/N 565003.

9. When TLS and WFS are used together, add Terminal Strip TS6 (P/N 335038) and wire as shown below. Jumper not required between TS1-TLS1/AUX1 & TS1-GND. WFS will open with flows less than .75 GPM.
   EN1000-600E, EN1000-1200E, EN1000-1800E, & EN1000-2200E:
   When control is provided with a Water Flow Switch, the WFS & TS6 must be installed by the customer, external to the cabinet. The WFS must be wired in series with the TLS supplied by ENTRON, per the diagram below.

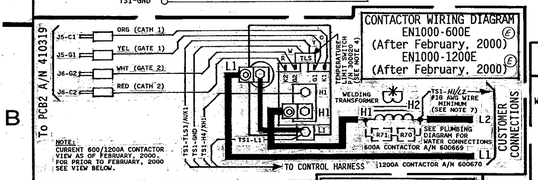

NOTE:
CURRENT 600/1200A CONTACTOR VIEW AS OF FEBRUARY, 2000. FOR PRIOR TO FEBRUARY, 2000 SEE VIEW BELOW.

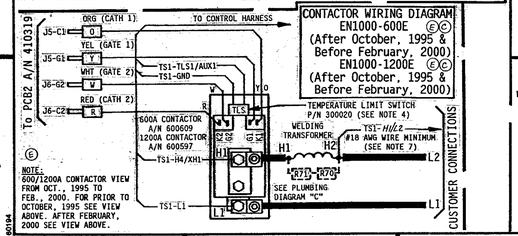

NOTE:
600/1200A CONTACTOR VIEW FROM OCT., 1995 TO FEB., 2000. FOR PRIOR TO OCTOBER, 1995 SEE VIEW ABOVE. AFTER FEBRUARY, 2000 SEE VIEW ABOVE.

PLUMBING DIAGRAMS

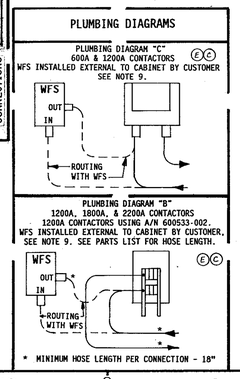

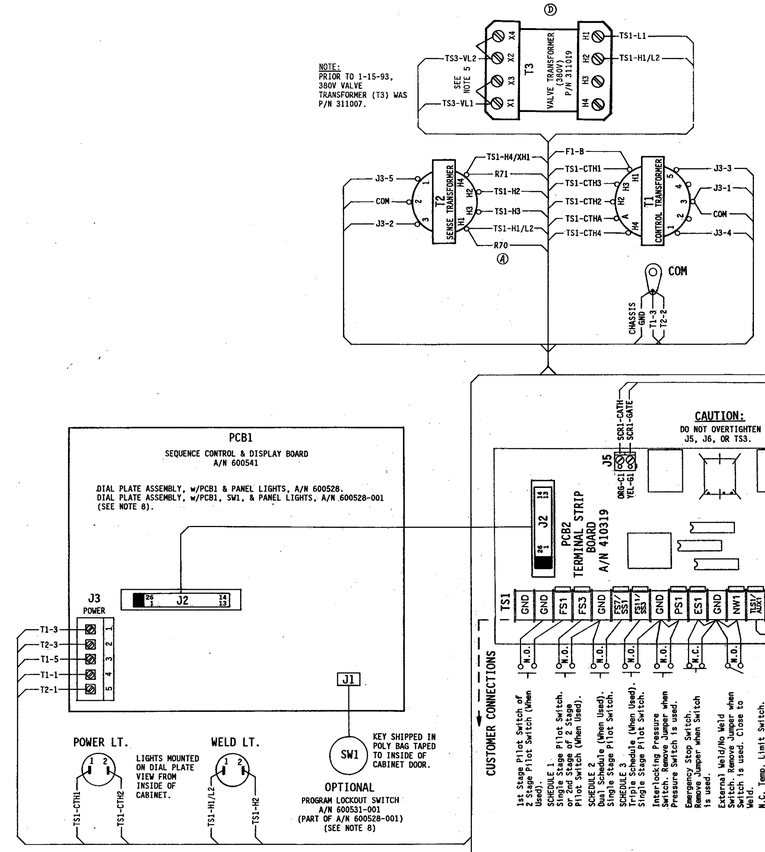

NO CIRCUIT CALIBRATION OR ADJUSTMENT EVER REQUIRED.

WARNING: HIGH VOLTAGE

VOLTAGES PRESENT IN THIS CONTROL CAN CAUSE SEVERE OR FATAL INJURIES

NOTE: EVEN THOUGH SUPPLY POWER TO THIS UNIT HAS BEEN DISCONNECTED, THERE MAY BE VOLTAGES IN THIS CONTROL ORIGINATING FROM OTHER SOURCES.

FOR ALL VOLTAGE POTENTIAL TO BE REMOVED FROM THIS CONTROL, POWER MUST BE REMOVED FROM ALL EXTERNAL CONTROL CIRCUITS CONNECTED TO TERMINALS IN THIS CABINET

CAUTION
Control Shipped Wired for 380 VAC
Unless otherwise specified - See Note 2.

CAUTION

DO NOT OPERATE WITHOUT WATER ON

POWER ON WITHOUT WATER FLOW MAY CAUSE DAMAGE TO CONTROL. TURN POWER OFF WHEN CONTROL IS NOT IN USE.

FOR SERVICE ON THIS CONTROL
CONTACT YOUR MACHINE DEALER
OR
ENTRON CONTROLS INC.
DIRECTLY : (630) 682-9600
485 EAST RANDY ROAD
CAROL STREAM, IL 60188
FAX # (630) 682-3374

PARTS LIST - CONTROL SECTION

QTY.	DESIG.	PART NO.	DESCRIPTION
1		600528	Assem., Dial Plate, EN1000, Consisting of:
@		600528-001	Assem., Dial Plate, w/Key Switch, EN1000, Consisting of:
1	PCB1	600541	Assem., Switch, Sequence Control & Display Board
@	SW1	600531-001	Assem., Switch, Keylock, Momentary, SPST
1		540251	Illustrated Panel, Dial Plate, EN1000
1		515104	Panel, Display Window, Red Filter, EN1000
1		565003	Hole Plug, 3/4" Diam., Black
1	PWR.LT.	305001	Lamp, Neon, Red, 230V
1	WLD.LT.	305002	Lamp, Neon, Clear, 230V
1	J2-J2	322303	Assem., Harness, Ctrl Bd. to Term. Strip Bd.
1	J3	322327-004	Assem., Harness, Power, EN1000/EN1001, 380V

PARTS LIST - CONTACTOR SECTION

EN1000-300E	EN1000-600E	EN1000-1200E	EN1000-1800E	EN1000-2200E	QUANTITY	DESIG.	PART NO.	DESCRIPTION
1	1	1	1	1		TS1	335034	Terminal Strip, 10 Pin, (Part of J3 Harness)
1	1	1				TS8	335017	Terminal Strip, 2 Pin, (Part of Contactor Assem.)
X	X	X	X	X		TS6	335038	Terminal Strip, 4 Pin, (For TLS/WFS), (SHIPPED LOOSE)
2	2	2	2	2		R70,71	225016	Resistor, Power, Surge, 500 Ohm, 100W
1	1	1	1	1		T1	310001	Transformer, Control, (Part of J3 Harness)
1	1	1	1	1		T2	310002	Transformer, Sense, (Part of J3 Harness)
1	1	1	1	1		T3	311019	Transformer, Valve, 150 VA, 380/408/415V
1	1	1	1	1		F1	308010	Fuseholder, 1 Pole, Mini, 600V
1	1	1	1	1		F1	307024	Fuse, Control, 1/4A, FKQ-R-1/4 or KLDR-1/4
3	3	3	3	3		F6,7,8(PCB2)	307022	Fuse 1 Amp, Slow Blow, 2AG, (Part of 410319)
1	1	1	1	1		(R70,71)	325024	Assem., Wire, Surge Resistor, 18 Ga., Black
2	2	2	2	2		(T3)	325149	Assem., Wire, Valve Transformer, 22 Ga., Black
							311015 (600533-002 & 600542)	
				1			600520	Assem., Cont., Thyristor, Air, 300A, 460/575V, w/TLS
			1				600669	Assem., Cont., Thyristor, Water, 600A, 460/575V
		1					600670	Assem., Cont., Thyristor, Water, 1200A, 460/575V
	1						600533-005	Assem., Contactor, SCR, Water, 1800A, 460/575V, w/TLS
1							600533-003	Assem., Contactor, SCR, Water, 2200A, 460/575V, w/TLS
		2					346004	Lug, 5/16 Bolt to 2/0 Wire, 600A Contactor, L1 & H1
		2					346002	LUG, 5/16 BOLT TO 4/0 WIRE, 1200A CONTACTOR, L1 & H1
1	1	1	1	1		PCB2	410319	Assem., PCB, Terminal Strip Board, EN1000
1	1	1	1	1			346004	Lug, Screw, Chassis GND, 2/0 Wire
		1	1	1			525136	Bracket, Mounting, 1800/2200A Contactors
		1	1	1			525035	Bracket, Mounting, 300/600/1200A Contactors
1	1	1	1	1		(PCB2)	510236	Plate, Mounting, Terminal Strip Board
1	1	1	1	1		TLS	300020	Switch,Temp.,Limit,(N.C.),(Part of 300/1800/2200A Cont.)
39"							900045	Hose, 3/8" ID
4	4						566010	Hose Clamp, 3/8" Hose
2	2						600179	Assem., Water Fitting, 3/8" Hose
+	+	+	+	+		WFS	600297	Assem., Water Flow Switch, 3/8" Hose, (SHIPPED LOOSE)
1	1	1	1	1		IDS	600044	Assem., Interlocking Door Solenoid
1	1	1	1	1			314001	Coil Assem. Only, IDS
1	1	1	1	1			510238	Cabinet, Control Style "E"
1	1	1	1	1			510241	Door, Cabinet, Style "E"
1	1	1	1	1			700105	Manual, EN1000
1	1	1	1	1			421183	Logic Diagram, EN1000 Control
1	1	1	1	1			421212-002	Wiring Diagram, EN1000-Series, "E" Cabinet

@ Optional Keylock when specified by customer. See Note 8. Pack Key in Poly bag 900148 & attach to Door w/Yellow Tape 900118.

X Optional when specified by customer. See Notes 4 & 9.

+ Optional Water Flow Switch (WFS) & Assembly when specified by customer. When WFS is specified, add quantity one (1) Terminal Strip TS6. WFS & TS6 are customer installed. WFS & TS6 are shipped loose. See Notes 4 & 9.
See Drawing #440449 for Customer Mounting & Knockout Detail "E" Cabinet.

MANUFACTURING INSTRUCTIONS:
See Drawing #440445 for Packing Instructions "E" Cabinet.
See Drawing #440448 for Label Locations "E" Cabinet.
SEE DRAWING #600550, #600550-001, #600550-002, or #600550-003 FOR MECHANICAL ASSEMBLY INSTRUCTIONS.

REV.	AUTH.	DESCRIPTION	DRWN BY DATE	CHK'D BY DATE
E	ECN 2631	IN DRWG & P/L: FUSE F1 P/N 307024, FKQ-R-1/4 OR KLDR-1/4 & FUSEHOLDER P/N 308010. IN DRWG: ADDED TS8 & TS8 TO TS6 REF NOTE.	DEC 9-28 01	DEC 9-28 01
	ECN 2593	FOR 600A XTOR COLUMN IN P/L:DEEN XTOR 600669 REPLACED 600669 & 538021;FOR 1200A XTOR COLUMN IN P/L:1200A XTOR 600670 & 11/93 538021-002;FOR WFS:CARTER 600297 & 538021-003 REPLACED 538021-002 & 538021 OCT. 1993:ADDED REF (REFER FEB. 1999) & UPDATED REF NOTE:FOR 1200A XTOR VIEW ...."IN DRWG:ADDED 600/1200A XTOR W/S CARTER 600297		
	ECN 2586	FOR 600A & 1200A XTOR COLUMNS IN P/L:ADDED OPTIONAL WFS 600297 & 538021-003 REPLACED 538021 & 538021-002 OCT. 1993;ADDED 600A XTOR COLUMNS IN P/L: UPDATED DESCRIPT OF TS6 335038 & SPT 066897;IN DRWG: BELOW P/L:UPDATED OPTIONAL WFS & TS6 REF NOTE;IN DRWG:UPDATED WFS USAGE REF ON WFS/TS6 REF NOTE. ADDED TS6 USAGE REF TO TS6;UPDATED PLUMBING DIAGRAMS "C" & "E" WFS USAGE REF. & UPDATED NOTE 9 "TLS/WFS USAGE...."		
D	ECN 2441	FOR 300A XTOR,600A XTOR,1200A XTOR,1800A XTOR, & 2200A XTOR COLUMNS IN P/L:T3 VALVE XFMR, 311015 & 311019 T3 WIRE ASSEM (T1)325149 REPLACED T2 311015;IN DRWG: T3 WIRE ASSEM (T1)325149 & 311015 REPLACED 311015 & ADDED PREVIOUS XTOR OF 311015;	DEC 5-24 97	DEC 5-24 97
C	ECN 2334	FOR 600A XTOR COLUMN IN P/L:ADDED LUG (311460)&L1 & H1 REPLACED 346004 & 346002;FOR 600A XTOR 600669 GAS 600 WSF PART OF 600A XTOR;FOR 1200A XTOR COLUMN IN P/L:1200A XTOR 600597 WAS 600533-002;ADDED BRKT 525035 & PLATE 530023,DWN'D BRKT 525136,(20")HOSE 4(1656010),(2)GK00179 & (+)WFS 600297;UPDATED TO 300020 DESC.NOW NOT A 300/600 TLS;FOR 1800A & 2200A XTOR W/O:ADDED 600 & 1800 XTOR "BEFORE OCT.1995" ADDED REF 625035 & PLATE 530023,DWN'D BRKT 525136,(20")HOSE 4(1656010),(2)GK00179 & (+)WFS 600297;UPDATED TO 300020 DESC.NOW NOT A 300/600 TLS;FOR 1800A & 2200A XTOR W/O:ADDED 600 & 1800 XTOR "BEFORE OCT.1995" ADDED REF "600540"&"(IN 1800)/2200A XTOR W/O:ADDED 1800A XTOR "BEFORE OCT.1995" & ADDED REF NOTE "PRIOR TO OCT.1995;...;IN DRWG:ADDED 600/1200A XTOR W/O (AFTER OCT.1995),UPDATED NOTE 9 "TLS/WFS USAGE...." ADDED REF (REFER FEB. 1999) & UPDATED REF NOTE FOR 1200A XTOR,;IN PLUMBING DIAGRAM "B":ADDED 1200A XTOR REF "600533-002";IN PLUMBING DIAGRAM "C":ADDED 1200A XTOR REF.	DEC 11-24 96	DEC 11-24 96
	2270	IN DRWG:UPDATED NOTE 8 "EXTERNAL VALVE POWER....";		

REV.	AUTH.	DESCRIPTION	DRWN BY DATE	CHK'D BY DATE
B	ECN 2422	FOR 300A XTOR,600A XTOR,1200A XTOR,1800A XTOR, & 2200A XTOR COLUMNS IN P/L:F1 FUSEHOLDER 308010 WAS 308008;IN DRWG:DWN'D DASHED LINE REPRESENTING 2 POLE FUSEHOLDER FOR F1 IS NOW 1 POLE;	DEC 11-15 96	DEC 11-15 96
A	ECN 2225	FOR 300A XTOR,600A XTOR,1200A XTOR,1800A XTOR, & 2200A XTOR COLUMNS IN P/L:SURGE RESISTORS R70,71 225016 REPLACED R70,71,75,76 222516 & QTY 1 FOR 325024 WAS 311M OHMS;SURGE RESISTORS R70,71 500 OHMS REPLACED R70,71,75,76 250 OHMS & T2-H1 NOW 1800/2200A XTOR W/O:ADDED 1800/2200A XTOR W/O 600/1200A XTOR W/O:UPDATED SURGE RESISTOR WIRING ON WELDING XFMR;	DEC 9-13 94	DEC 9-13 94
—	—	ORIGINAL RELEASE		

ENTRON CONTROLS INC

SCALE	DATE	DRAWN BY	CHK'D BY	APPROVED BY
NA	8-30-94	DEC	DEC 8-30-94	

TOLERANCE UNLESS SPECIFIED
ANGLES: ± 1°
DECIMALS: ± .010
FRACTIONS: ± 1/64

REVISED

REV LTR	APPROVED BY	
E	DATE	9-24-01 DEC

WIRING DIAGRAM, EN1000-SERIES, "E" CABINET, WIRED FOR 380 VAC OPERATION

NEXT ASSM/USED ON	DRAWING NUMBER	REV
EN1000-300E, EN1000-600E, EN1000-1200E, EN1000-1800E, EN1000-2200E	421212-002	E

DRAWING NUMBER 421212-002 REV E

421212-002E

22x34 ENTRON 470046