EN6001

User Manual

700230D: Intended for use with firmware version 5.0 and higher

ENTRON

ENTRON Controls, LLC.
1402 S. Batesville Road
Greer, SC 29650
Phone: 864.416.0190
fax: 864.416.0195
www.entroncontrols.com

RWMA®
MEMBER

Table of Contents

1.0 Introduction

1.1 Features 3

1.2 Reference Documents 4

1.3 Specifications 5

2.0 Safety

2.1 Cooling Water 6

2.2 Warnings and Labels 7

3.0 Quick Start

3.1 Install and Setup 9

4.0 Wiring

4.1 Wiring Diagram 11

4.2 Discrete I/O 13

4.3 Wiring for AC Option 17

5.0 Programming

5.1 Keypad Functions 20

5.2 Menu Navigation 21

5.2.1 Status Screens 22

5.2.2 Main Menu Screens 26

5.2.3 Setup Menu Screens 39

5.2.4 Other Screens 51

5.3 Timing Cycles 54

5.3.1 Worksheets 57

5.4 I/O Programming 59

6.0 Troubleshooting

6.1 Error Codes 62

6.2 Non-Error Code Issues 68

6.3 Noise Suppression 71

6.4 Warranty and Service Policy 72

1.1 Features

FEATURES:

- Calibrated constant current regulation; Primary / Secondary feedback
- Current monitoring with high, low, and pre-limits
- Up to 64 programs (internal or 16 external selection)
- On Timer Membrane Keyboard with backlit 128x64 (8 lines) LCD graphic display
- Six (6) inputs and four (4) outputs with output protection on CPU
- Electrode management functions, including stepping, tip-dressing and preset curves
- Welding programs may be linked together for complex spot schedules (chained or successive)
- Refresh firmware through USB device
- Load/export control settings from/to USB device
- AC 60/50 Hz welding supported
- Spot / Pulsation / Seam welding / Flash or Butt welding / Brazing
- Multiple weld intervals plus pulsation, upslope and downslope
- Air-over-oil gun operation
- Retraction – maintained, and momentary
- Water Saver (contactor timer)
- Shorted contactor detection

OPTIONS :

- Program Lockout (key switch)
- Operation Mode Switch (Program Lockout and Weld/No Weld)
- Error Reset Switch
- Optional plug-in Ethernet card provides PLC compatibility via MODBUS and Ethernet/IP for remote I/O (ENLink)
- AC Valve outputs
- Interlocking Door Solenoid (IDS)
- Full Phase Isolation (FPI)
- Water Flow Switch (WFS)

SCHEDULE PARAMETERS:

- Schedule Number: 0 to **63**
- Squeeze Delay: 0 to 99 cycles
- Squeeze: 0 to 99 cycles
- Valve Mode: None / All combinations of 3 valves
- Weld1: 0 to 99 cycles
- Weld1: Phase Shift / Constant Current
- **Heat1: 0 to 99%**
- **Current1: 0 to 100.00 kA**
- **Cool1: 0 to 99 cycles**
- Slope: 0 to 99 cycles
- Weld2: 0 to 99 cycles
- Weld2: Phase Shift / Constant Current
- Heat2: 0 to 99%
- Current2: 0 to 100.00 kA
- Cool2: 0 to 99 cycles
- Hold: 0 to 99 cycles
- Off: 0 to 99 cycles
- Impulses: 1 to 99 cycles
- Heat/Current Offset: -15 to +15%
- Cycle Mode: Non-repeat / Repeat / Chained / Successive / Wait-here

1.2 Reference Documents

ADDITIONAL REFERENCES:

Additional documentation can be found by visiting http://www.EntronControls.com

EN6001 Wiring Diagram	421537
Cabinet Guide	780054
Sell Sheet	780101
Retrofit User Manual	700234
Communication Manual	700231
EN6001 EIP App Note	700237
Water Flow Switch (WFS) App Note	700149
Full Phase Isolation	700098

1.3 Specifications

Protection Type:	NEMA 1 and NEMA 12 Enclosure
CPU operating voltage (without I/O):	24 VDC ±5% with maximum ±2% ripple at 220 mA
Rated current (without I/O) at 24V:	approximately 500 mA - SV1 - SV3 approximately 500 mA - PO1 - PO4
Fuses:	F1 – 1.25A@600VAC Class CC FNQ-R-1-1/4 F2 – 1.25A@600VAC Class CC FNQ-R-1-1/4 F3 – 1.25A@600VAC Class CC FNQ-R-1-1/4 F4 (AC Option) – 1.25A@600VAC Class CC FNQ-R-1-1/4 F5 (AC Option) – 1.25A@600VAC Class CC FNQ-R-1-1/4 PCB1-F6 – 1A@250VAC Type 2AG S/B 229001 PCB2-F7 – 1A@250VAC Type 2AG S/B 229001 PCB2-F8 – 1A@250VAC Type 2AG S/B 229001 PCB2-F9 – 1A@250VAC Type 2AG S/B 229001
Environmental Conditions:	
Operation:	0°C to 60°C
Storage/Transport:	-25°C to 70°C
Air pressure:	0 to 2000m above sea level
Humidity:	no dew point excursion allowed
Number of Schedules:	64
Discrete I/O:	
Inputs:	logic ‘1’ : +24V ±15% at 10 mA logic ‘0’ : 0 to +2V or open
Outputs:	24VDC maximum 0.5A with short circuit protection Optional: valve output fail safe relays per AWS J1.1:2013 24 - 120VAC maximum 1A
NW1:	24VDC at 300 mA during weld
Power Supply:	24VDC ±5% with maximum ±2% ripple at 3.2A
Optional AC Valve Power Supply:	120 VAC 100 VA
Programming:	Front Panel or Ethernet
Operating system:	In Flash Memory; reloadable from USB flash drive
Program memory:	RAM memory
Operating voltage:	240, 380, 480, 575 VAC ±10%
Cooling Water:	1.5GPM at 104°F (40°C) maximum inlet temperature. For water quality requirements, refer to AWS J1.2M/ J1.2:2016 Guide to Installation and Maintenance of Resistance Welding Machines

2.1 Cooling Water

Be sure power to an electronic contactor is turned off when water is turned off.

With a voltage applied, most water will ionize and begin to conduct current between points of high differential voltages. This current is sufficient to heat the water past the boiling point, creating steam and possibly causing the rubber hose to burst. The water spraying over the high voltage circuit can cause considerable damage to the contactor and, most likely, the control circuitry as well. Never use metallic or other conductive tubing to plumb a water-cooled resistance welding contactor. Heater hose has a very high carbon content and should not be used for contactor plumbing. A low carbon, reinforced hose (such as the hose originally supplied with the unit), no less than 18" long, must be used to connect the Heatsinks to each other and to the bulkhead fitting on the inside wall of the cabinet.

The 1200A modular water-cooled SCR Contactor is electrically isolated from electrical circuit within the contactor section. No minimum length of water hose is required for electrical isolation of the contactor. It is still recommended to turn power off when control is not in use.

WATER OFF—POWER OFF

POWER ON—WATER ON

For all water-cooled Heatsinks, be sure water is turned ON before placing welder in operation. An open drain is recommended for best operation. If a closed return system is used, be sure return line is properly sized so that back pressure will not reduce water flow below recommendations. A sight flow indicator is recommended.

2.2 Warnings and Labels

READ THIS MANUAL COMPLETELY
BEFORE ATTEMPTING TO INSTALL OR OPERATE THE CONTROL.
STORE THIS TECHNICAL INFORMATION IN A PLACE
TO WHICH ALL USERS HAVE ACCESS AT ANY TIME

ENTRON Controls follows the practices of the RWMA for precautionary labeling. See RWMA Bulletins #1 and #5 for a complete description. Observe the WARNING, DANGER, and CAUTION labels affixed to control to maintain safe operation. ENTRON Controls, LLC. and its affiliates are not responsible for any harm caused by non-compliance of instructions associated with the aforementioned labels or signal words to follow.

The signal word **DANGER** is used to call attention to immediate or imminent hazards which if not avoided ***will result*** *in immediate, serious, or personal injury or loss of life. Examples are: exposed high voltage; exposed fan blades.*

The signal word **WARNING** is used to call attention to potential hazards which ***could result*** *in personal injury or loss of life. Examples are: not using proper personal protection; removal of guards.*

The signal word **CAUTION** is used to call attention to hazards which ***could result*** *in non-life threatening personal injury or damage to equipment.* ***CAUTION*** *may also be used to alert against unsafe practices.*

The term **NOTICE** is used for making recommendations on use, supplementary information, or helpful suggestions. Non-compliance with these recommendations ***may result*** *in damage to control, welding machine, or workpiece.* ENTRON Controls, LLC. and its affiliates are not responsible for damage caused by such non-compliance, and warranties may be voided accordingly at the discretion of ENTRON Controls.

WARNING: Individuals with cardiac devices should maintain a safe distance due to strong magnetic fields arising from resistance welding. The function of cardiac pacemakers and defibrillators may be disturbed, which may cause death or considerable health damages! These persons should avoid the welding system unless authorized by a licensed physician.

2.2 Warnings and Labels

Adhere to all of the cautions, warnings, and danger alerts on the labels located within the control as well as this document.

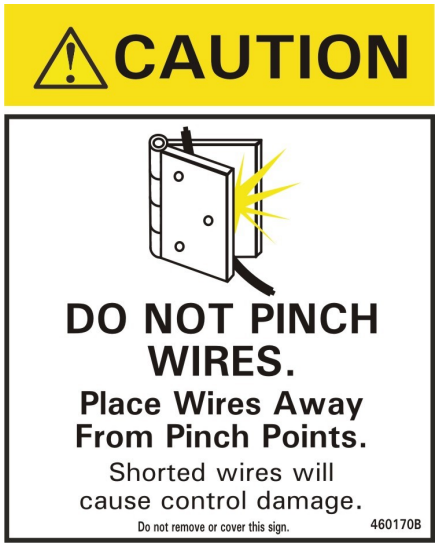

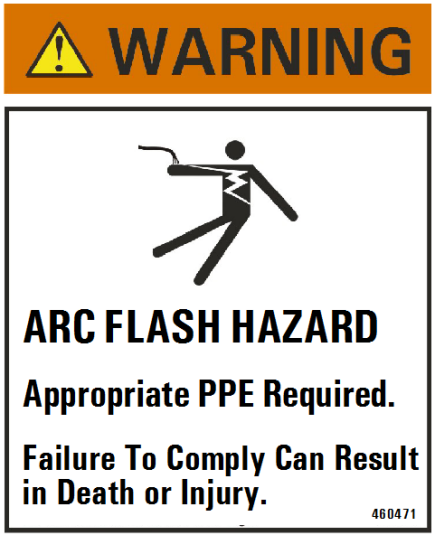

3.1 Install and Setup

For wall-mount dimensions, refer to the ENTRON Cabinet Guide (doc 780054) on our website.

1. Ensure that all power is removed before connecting the control.
2. Connect the chassis ground to an external earth ground.
3. Connect L1, L2, and H1 as shown in the "CUSTOMER CONNECTIONS" section of the wiring diagram. An H1 connection will be required for each transformer in a multiple-control layout.
4. Using the wiring diagram, verify the T1 jumper connection properly corresponds with the line voltage.
5. Ensure that all electrical and mechanical connections are tightly secured.
6. Connect cooling water as required.
7. Connect any necessary foot switches, valves, E-Stop switches, pressure switches, etc. as demonstrated below.

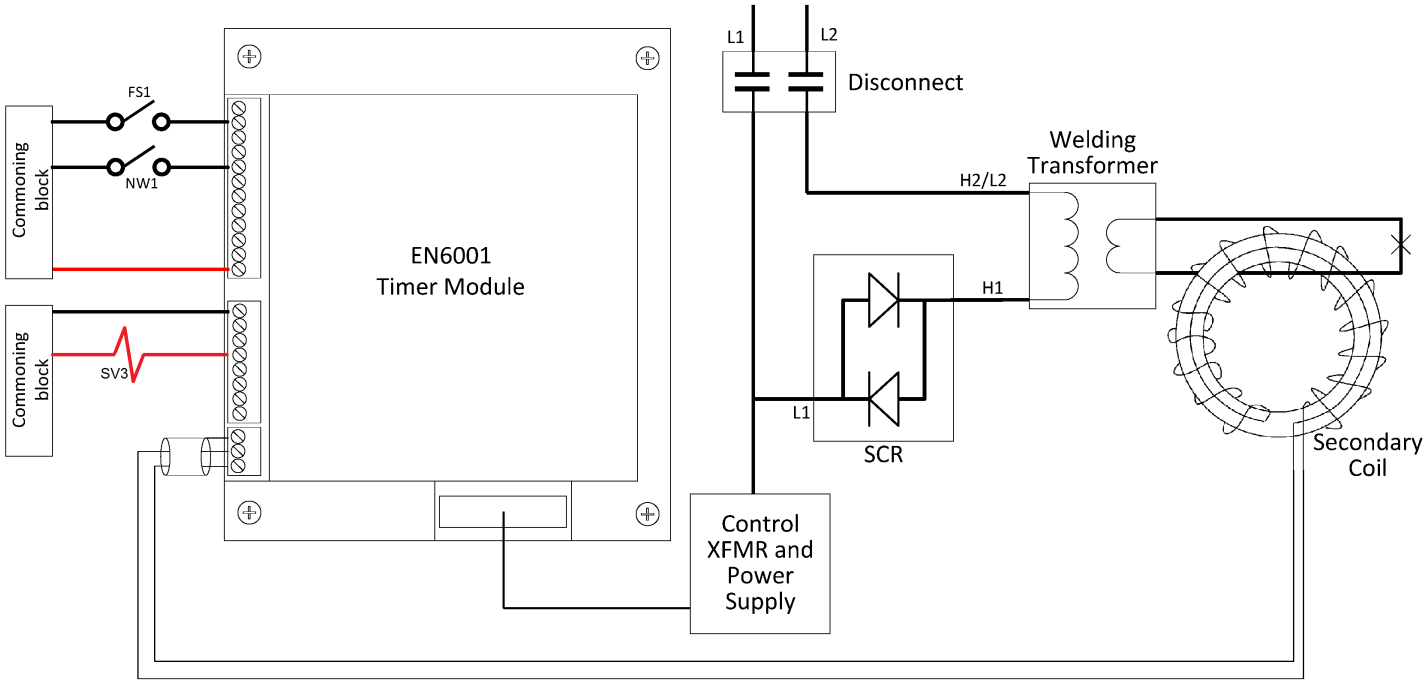

3.1 Install and Setup

8. Beginning with default settings, program a test-schedule with the following parameters below:

PARAMETER	SETTING
Squeeze Delay	0 cycles
Squeeze	60 cycles
Weld 1	0 cycles
Cool 1	0 cycles
Slope	0 cycles
Weld 2	8 cycles
>Mode	Phase Shift
>Heat	25 %
Cool 2	0 cycles
Hold	60 cycles
Off	0 cycles
Impulses	0 cycle

9. Run the test-schedule with the control in “No Weld” mode. Proper sequencing can be verified by monitoring the status page. *Note: The display refresh time is 500ms; therefore any sequences less than 30 cycles (60Hz) or 25 cycles (50 Hz) might not be displayed.

10. Once proper sequencing is verified, adjust timing cycles, inputs, and outputs as necessary.

4.1 Wiring Diagram

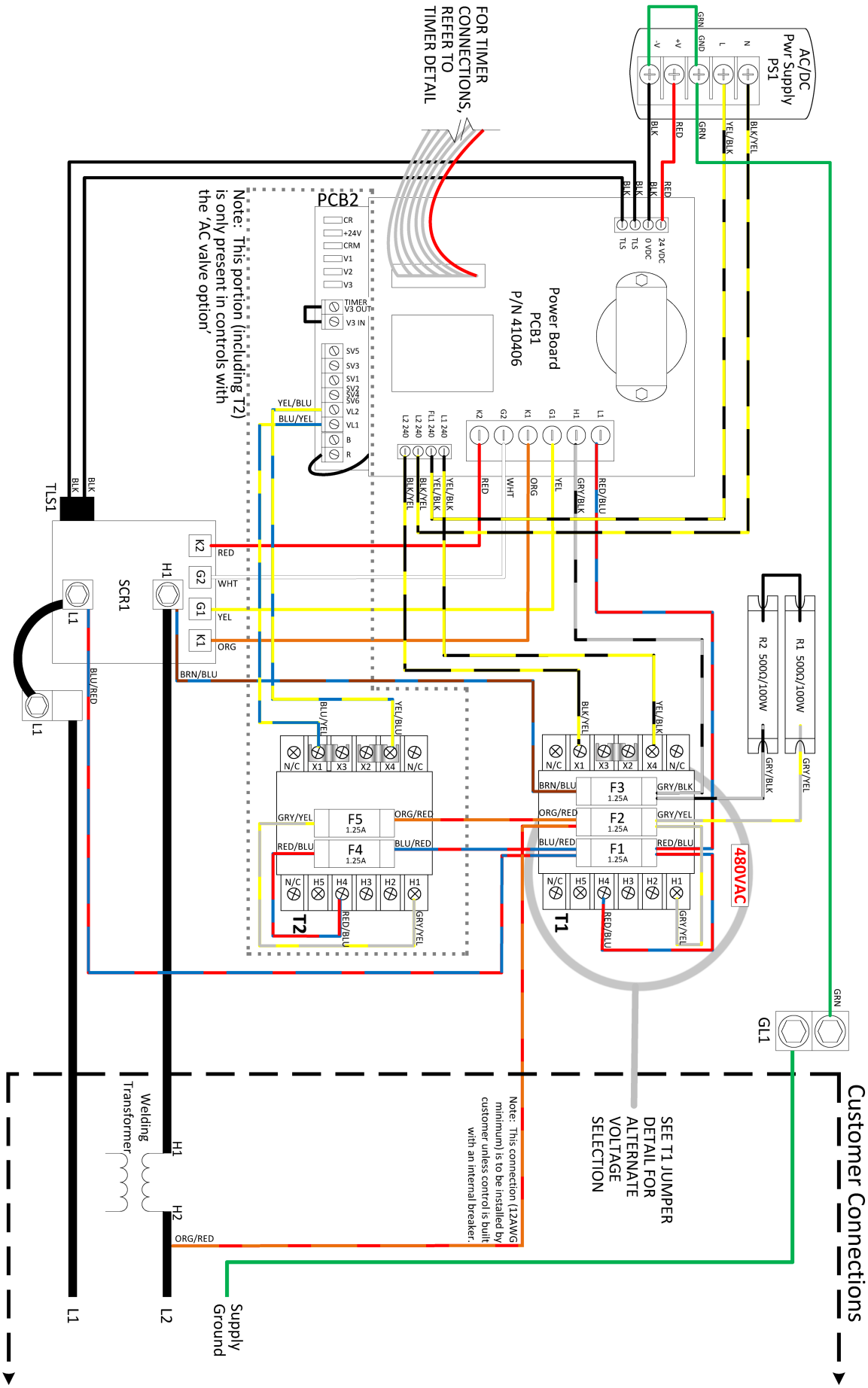

4.1 Wiring Diagram

TIMER DETAIL

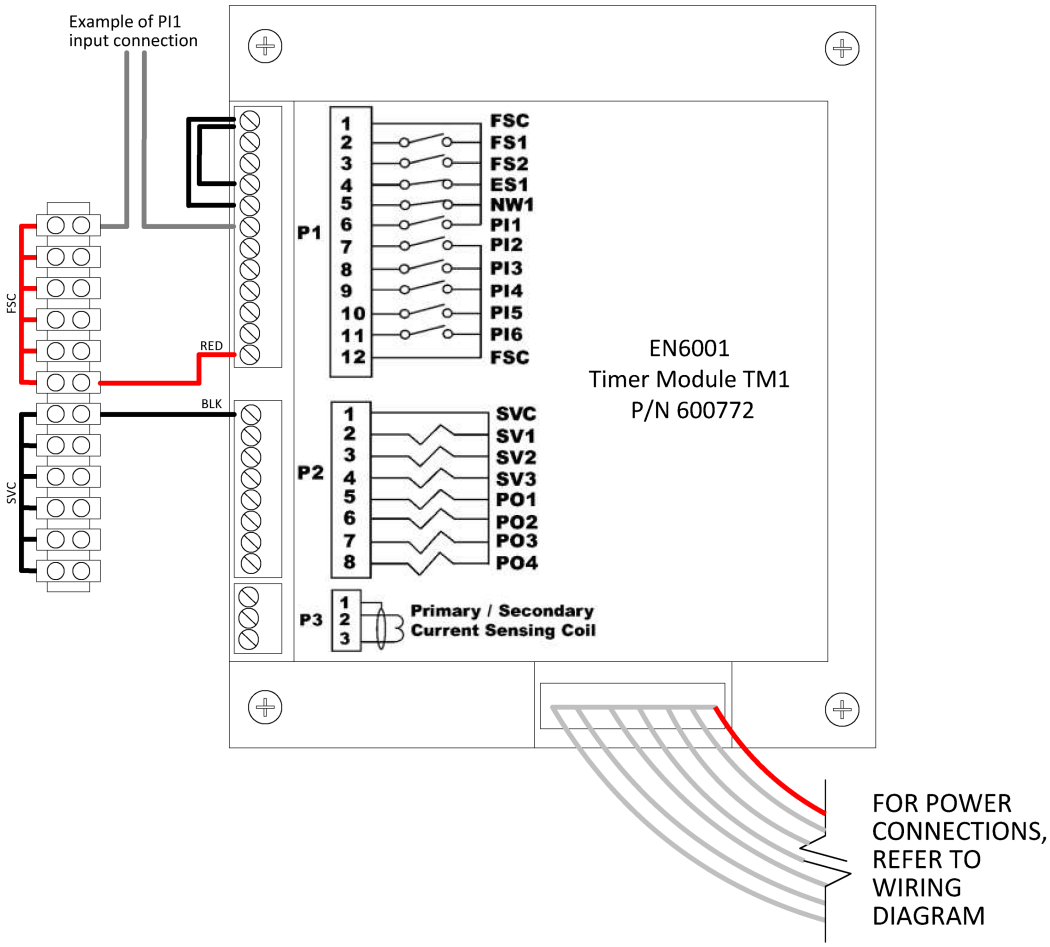

T1 JUMPER DETAIL

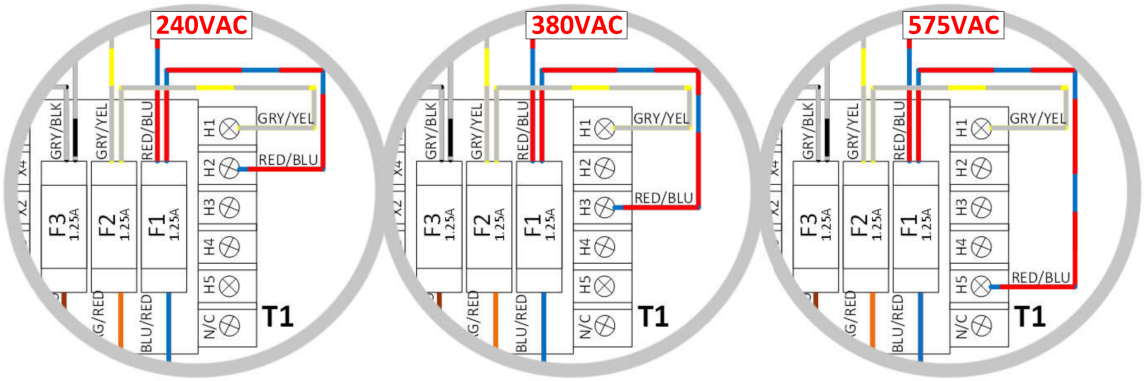

Note: 'AC valve option' should have the same primary configuration for **BOTH (T1 & T2)** transformers.

4.2 Discrete I/O

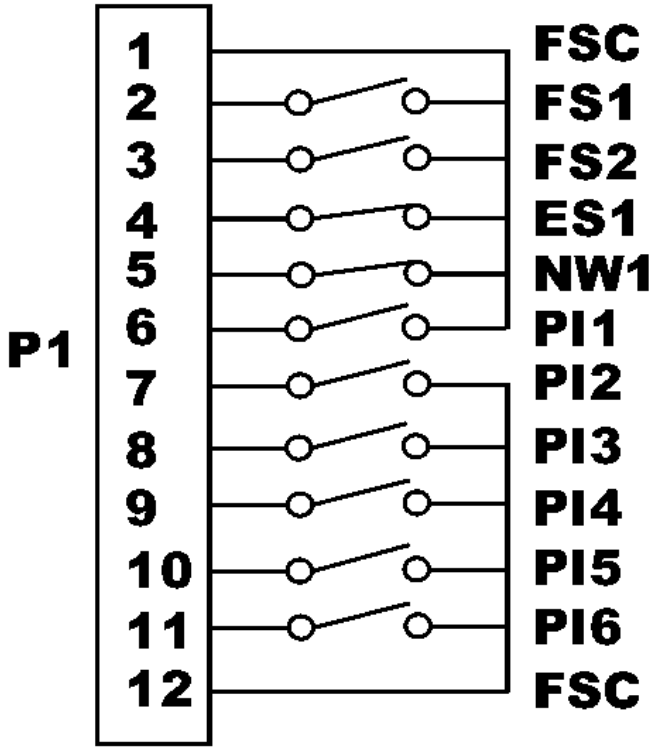

Terminal	Designation
P1—1	Foot Switch Common
P1—2	Foot Switch #1
P1—3	Foot Switch #2
P1—4	Emergency Stop
P1—5	No Weld Signal
P1—6	Programmable Input #1
P1—7	Programmable Input #2
P1—8	Programmable Input #3
P1—9	Programmable Input #4
P1—10	Programmable Input #5
P1—11	Programmable Input #6
P1—12	Foot Switch Common

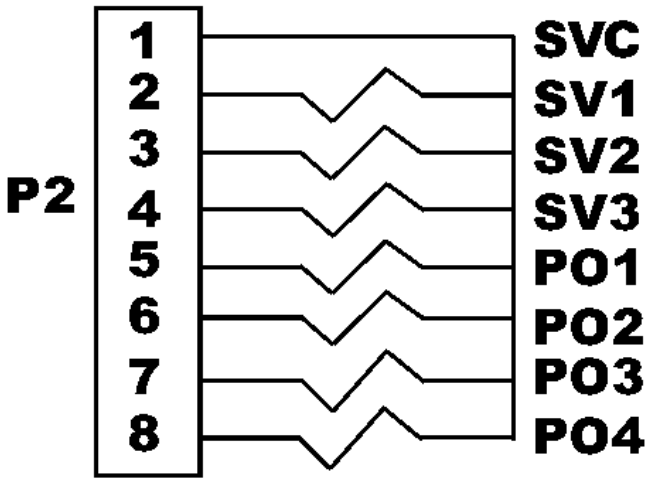

P2—1	Solenoid Valve Common
P2—2	Solenoid Valve #1
P2—3	Solenoid Valve #2
P2—4	Solenoid Valve #3
P2—5	Programmable Output #1
P2—6	Programmable Output #2
P2—7	Programmable Output #3
P2—8	Programmable Output #4

4.2 Discrete I/O

Timer Inputs (P1)

[FSC] Foot Switch Common (P1-1 or P1-12)

Input Common connection - serves as common point for FS1, FS2, ES1, NW1, and PI1 - PI6. Internally connected to 24VDC.

[FS1] Foot Switch #1 (P1-2)

Used as start/initiation input for weld sequences. When connected to FSC, it will be active and draw 10 mA. May be used alone as Single Stage Foot Switch or Stage 1 of a 2-Stage Foot Switch. Activates Internal Control Relay 1 (CR1). For more information on using a Two Stage operation, see Section 5.4. Do not use solid state control devices; only use dry switch contacts without snubbers.

[FS2] Foot Switch #2 (P1-3)

Used as a start/initiation input for weld sequences. When connected to FSC, it will be active and draw 10 mA. May be used alone as a Single Stage Foot Switch or Stage 1 of a 2-Stage Foot Switch. Activates Internal Control Relay 1 (CR1). For more information on using a Two Stage operation, see the Section 5.4. Do not use solid state control devices; only use dry switch contacts without snubbers.

[ES1] Emergency Stop (P1-4)

When open, the control stops any and all processes (all valves and firing pulses turn off). While in Emergency Stop condition, **Status Page 1** will display Error Code 09 until the condition has been cleared. If the execution of a schedule was interrupted by means of this switch, the control will not re initiate automatically (after the Emergency Stop condition is removed). Upon release of this switch, it must be re-initiated by closing FS1 or FS2.

[NW1] No Weld Signal (P1-5)

External Weld/No Weld input. Close for Weld; open for No Weld. When active, it will draw 10 mA. When welding, it will draw 300 mA. When open, no source voltage is provided to the weld firing circuit and the control cannot weld.

[PI1] Programmable Input #1 (P1-6)

Use as a multi-purpose programmable input. Via programming, it may be used as transformer temperature limit switch (TT1), 2nd Stage, Back Step, or **Part Counter Reset (PCTR)** input. See Section 5.4 for more information. When connected to FSC, it will be active and draw 10 mA.

[PI2] Programmable Input #2 (P1-7)

Used as a multi-purpose programmable input. Via programming, it may be used as **Edit Lock**, Pressure Switch (PS1), Interlock, or Weld Counter Reset (WCTR) input. See Section 5.4 for more information. When connected to FSC, it will be active and draw 10 mA.

[PI3] Programmable Input #3 (P1-8)

Used as a multi-purpose programmable input. Via programming, it may be used as Error Reset, Sch. Select 1, **Stepper Reset**, or 2nd Stage input. See Section 5.4 for more information. When connected to FSC, it will be active and draw 10 mA.

4.2 Discrete I/O

[PI4] Programmable Input #4 (P1-9)

Used as a multi-purpose programmable input. Via programming, it may be used as Interlock, Sch. Select 2, or **Error Reset** input. See Section 5.4 for more information. When connected to FSC, it will be active and draw 10 mA.

[PI5] Programmable Input #5 (P1-10)

Used as a multi-purpose programmable input. Via programming, it may be used as **Back Step**, Sch. Select 4, or Retraction input. See Section 5.4 for more information. When connected to FSC, it will be active and draw 10 mA.

[PI6] Programmable Input #6 (P1-11)

Used as a multi-purpose programmable input. Via programming, it may be used as Stepper Reset, Sch. Select 8, Edit Lock, or **Escape** input. See Section 5.4 for more information. When connected to FSC, it will be active and draw 10 mA.

4.2 Discrete I/O

Timer Outputs (P2)

[SVC] Solenoid Valve Common (P2-1)

24VDC negative return connection - serves as common point for SV1, SV2, SV3, and PO1 - PO4. Also internally connected to 0VDC.

[SV1] Solenoid Valve #1 (P2-2)

24VDC output rated at 0.5 A maximum. Used for weld valve 1. Supplies 24 VDC when active. Connect the other side of the load to SVC. Protected by Internal Control Relay 1 (CR1).

[SV2] Solenoid Valve #2 (P2-3)

24VDC output rated at 0.5 A maximum. Used for weld valve 2. Supplies 24 VDC when active. Connect the other side of the load to SVC. Protected by Internal Control Relay 1 (CR1).

[SV3] Solenoid Valve #3 (P2-4)

24 VDC output rated at 0.5 A maximum. Used for weld valve 3. Supplies 24 VDC when active. Connect the other side of the load to SVC. Protected by Internal Control Relay 1 (CR1).

[PO1] Programmable Output #1 (P2-5)

24VDC output rated at 0.5 A maximum. Via programming, it can be used for **Any Error**, Retraction, Force Error, or Major Error output. See Section 5.4 for more information. Not isolated via Internal Control Relay (CR1). Supplies 24 VDC when active. Connect the other side of the load to SVC.

[PO2] Programmable Output #2 (P2-6)

24 VDC output rated at 0.5 A maximum. Via programming, it can be used for **AVC Error**, Contactor Error, Step End, or End of Sequence (EOS) output. See Section 5.4 for more information. Not isolated via Internal Control Relay (CR1). Supplies 24 VDC when active. Connect the other side of the load to SVC.

[PO3] Programmable Output #3 (P2-7)

24 VDC output rated at 0.5 A maximum. Via programming, it can be used for **Current Error**, Any Error, Count End, or Water Saver output. See Section 5.4 for more information. Not isolated via Internal Control Relay (CR1). Supplies 24 VDC when active. Connect the other side of the load to SVC.

[PO4] Programmable Output #4 (P2-8)

24 VDC output rated at 0.5 A maximum. Via programming, it can be used for **Step End**, Current Error, AVC Error, or Interlock output. See Section 5.4 for more information. Not isolated via Internal Control Relay (CR1). Supplies 24 VDC when active. Connect the other side of the load to SVC.

4.3 Wiring for AC Option

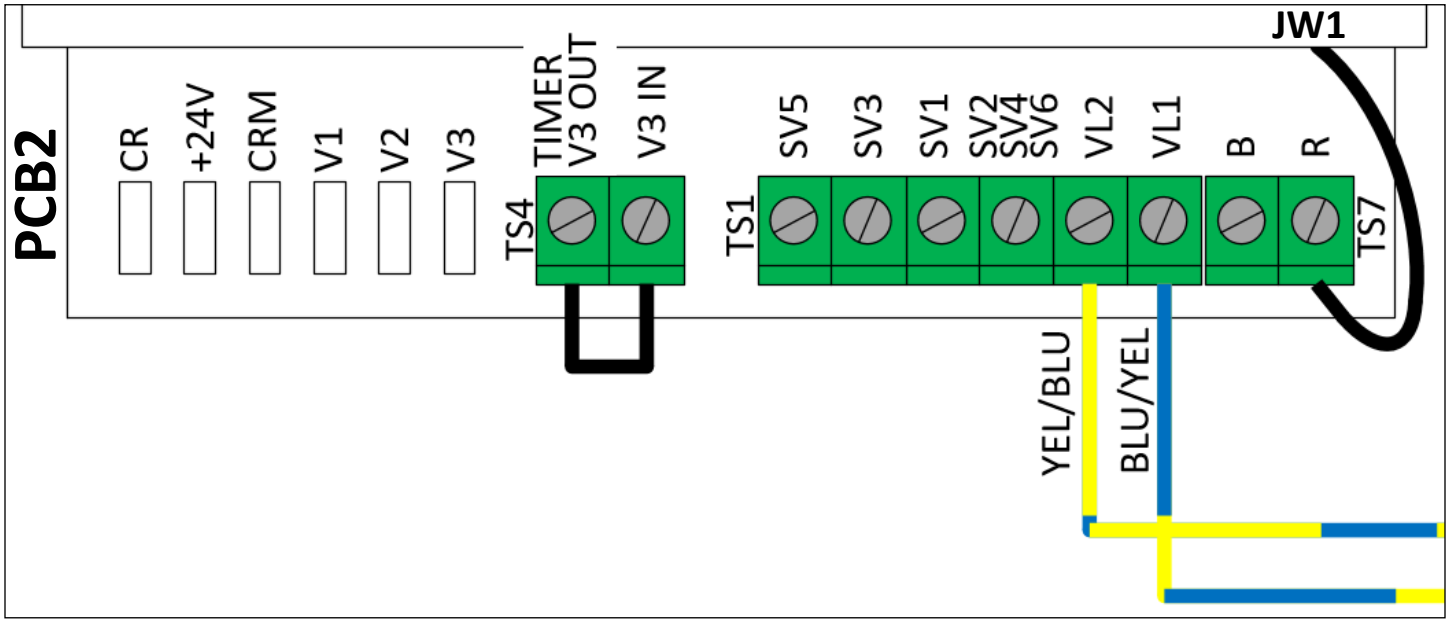

PCB2 TS1

[SV1] AC Solenoid Valve #1 (PCB2-TS1-SV1)
Solenoid Valve 1 - AC output rated at 1 A maximum. Used for weld valve 1. Supplies AC when active. Connect the other side of the load to SV2, SV4, SV6. Protected by Internal Control Relay 1 (CR1). VL1 is the source for this voltage.

[SV3] AC Solenoid Valve #2 (PCB2-TS1-SV3)
Solenoid Valve 2 - AC output rated at 1 A maximum. Used for weld valve 2. Supplies AC when active. Connect the other side of the load to SV2, SV4, SV6. Protected by Internal Control Relay 1 (CR1). VL1 is the source for this voltage.

[SV5] AC Solenoid Valve #3 (PCB2-TS1-SV5)
Solenoid Valve 3 - AC output rated at 1 A maximum. Used for weld valve 3. Supplies AC when active. Connect the other side of the load to SV2, SV4, SV6. Can be protected by Internal Control Relay 1 (CR1). Can **BYPASS** CR1 with the use of PCB2 TS7-B and TS7-R. VL1 is the source for this voltage.

[SV2/SV4/SV6] Solenoid Valve Common (PCB2-TS1-SV2, SV4, SV6)
AC return connection (solenoid valve common) - serves as a common point for SV1, SV3, and SV5. Internally connected to PCB2-TS1-VL2.

[VL1] Valve Power Line #1 (PCB2-TS1-VL1)
Typically an internally provided and connected AC power source ranging from 24 to 120 VAC to only provide power for AC valve terminals (SV1, SV3, SV5).

[VL2] Valve Power Line #2 (PCB2-TS1-VL2)
Typically an internally provided and connected AC power source ranging from 24 to 120 VAC to only provide power for AC valve terminals (SV1, SV3, SV5). Can be connected to ground if required.

4.3 Wiring for AC Option

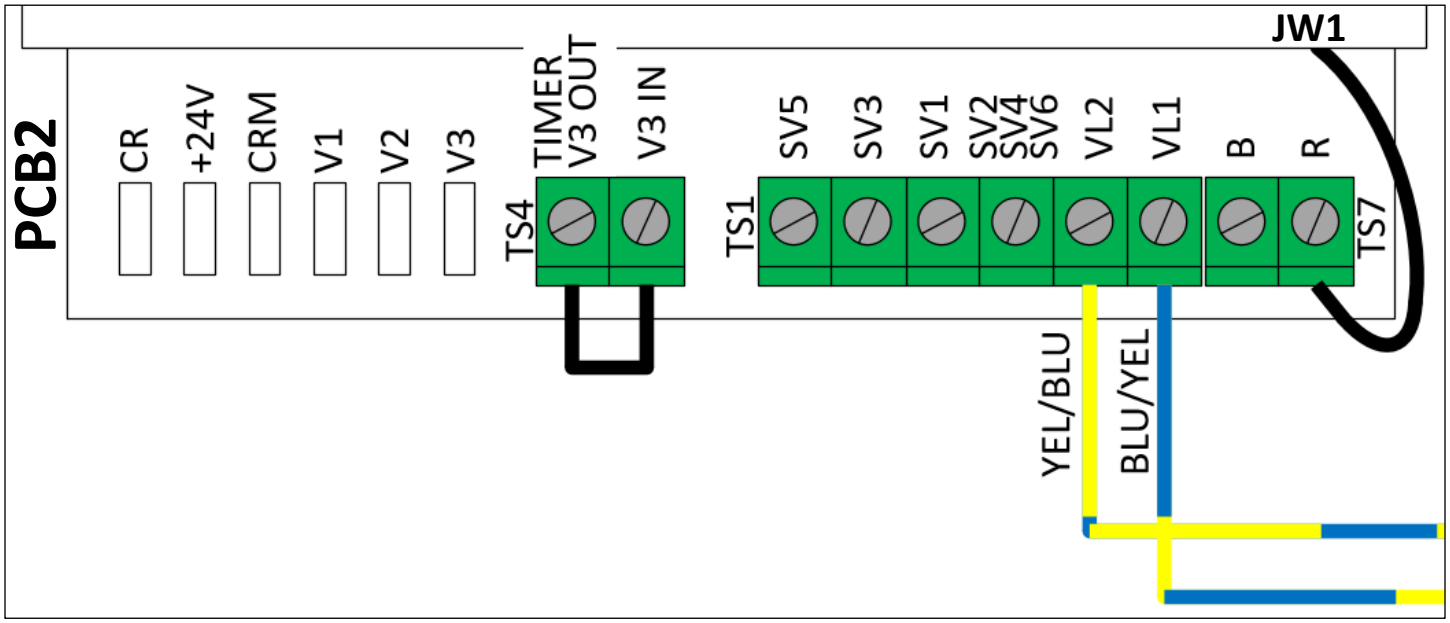

PCB2 TS4

[TIMER V3 OUT] Timer Valve 3 Output (PCB2-TS4-TIMER V3 OUT)

The 24V digital state of P2-4 on the timer module is supplied to this pin. Nothing other than the V3IN jumper should be connected here; if the connection is unused, then this output should not have a connection other than V3IN. See TS4-V3IN. With the jumper installed, SV5 will follow the state of Valve 3.

[V3IN] Valve 3 Control Input (PCB2-TS4-V3IN)

24V digital input used to control SV5. Normally connected to TS4-TIMER V3 OUT. When a jumper is connected from TS4-TIMER V3 OUT, the state of SV5 is controlled by the State of V3 and will mimic the Valve 3 DC output. When required (and V3 is not needed), the jumper between TS4-TIMER V3 OUT to TS4-V3IN can be removed. The TS4-V3IN input can then be connected to any of the four programmable output terminals (P2-5 through P2-8) to obtain an AC output that mimics the programming of the output selected.

AC wiring information continues on the next page.

4.3 Wiring for AC Option

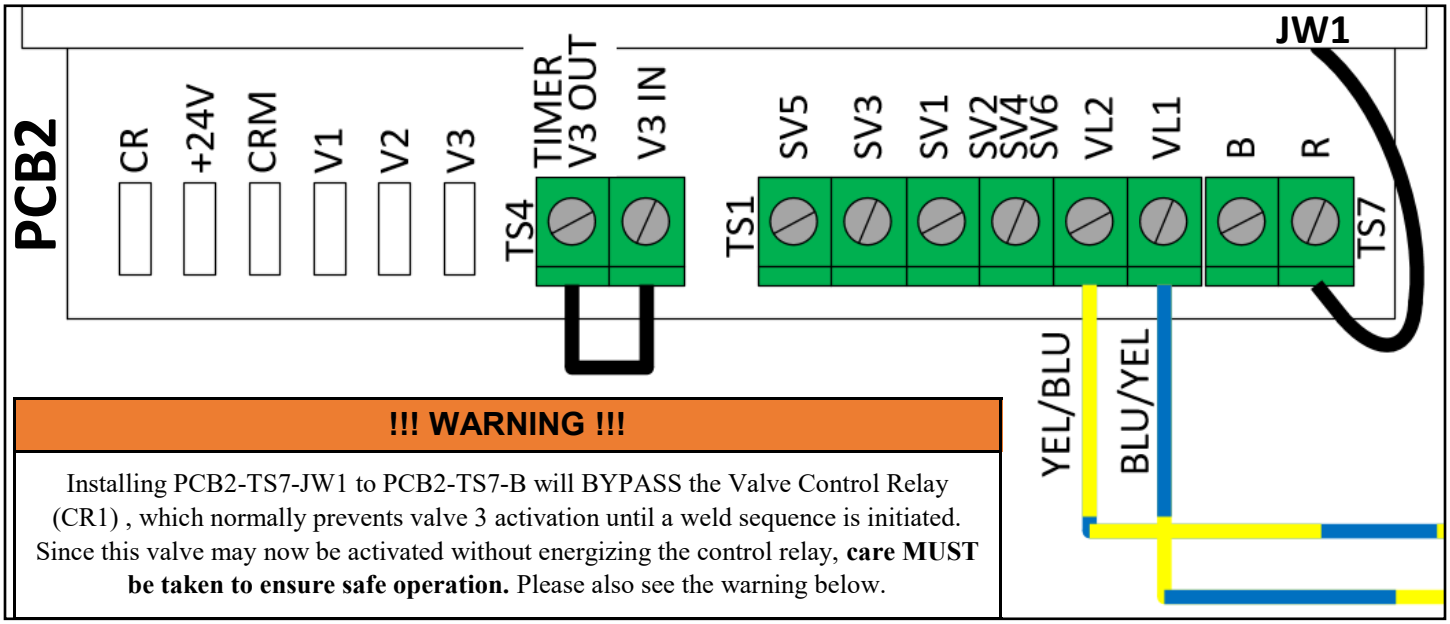

!!! WARNING !!!

Installing PCB2-TS7-JW1 to PCB2-TS7-B will BYPASS the Valve Control Relay (CR1) , which normally prevents valve 3 activation until a weld sequence is initiated. Since this valve may now be activated without energizing the control relay, **care MUST be taken to ensure safe operation.** Please also see the warning below.

PCB2 TS7

[R] AC Solenoid Valve #3 Safety Relay (PCB2 TS7-R)

The valve control relay (CR1) prevents valves SV1, SV3, and SV5 from activating without an initiation on either FS1 or FS2. **AC SAFETY RELAY** default connection is to JW1. CR1 protection is applied to the SV5 output. See the warning below**.**

[B] Bypass AC Solenoid Valve #3 Safety Relay (PCB2 TS7-B)

AC SAFETY RELAY optional connection to JW1. CR1 protection is **BYPASSED** to SV5 output. See the warning below**.**

!!! WARNING !!!

This control complies with AWS J1.1:2013 requiring fail safe contacts in series with valve and weld outputs to prevent spurious outputs. Valve 3 (SV1 to SV5) has a jumper (JW1) that allows enabling (connected to R) or disabling (connected to B) the contacts from Control Relay 1 (CR1). This is to allow for programming features that are in the I/O Map when using PCB2-TS4. Thus, when PCB2-JW1 is in the BYPASS mode, PCB2-TS1-SV5 can turn on independent of the status of the initiations FS1 and FS2. **Care MUST be taken to ensure safe operation.**

5.1 Keypad Functions

KEYPAD FUNCTIONS	
ESC	The ESCAPE key. Used to return to the previous menu.
↓ → ← ↑	The ARROW keys. Used to navigate. If in the menu screens, the down and right arrows move the cursor/selection down, while the up and left arrows move the cursor/selection up. If in the Status screens, the up and left arrows navigate to the previous Status screen, while the down and right arrows navigate to the next Status screen.
↵	The ENTER key. Used to select menus and confirm changes to parameters.
+ −	The PLUS and MINUS keys. Used to make changes to parameters. If the input for the parameter to be changed is a number, PLUS will increase the number by one and MINUS will decrease the number by one. If the input for the parameter to be changed is a menu of different options, either key can be used to scroll through the menu options. Holding the buttons down will cause the control to increment/decrement at a faster rate.
F	The FUNCTION key. Used to navigate from the Status screens to the Main Menu.
WELD ●	Enables weld current. If not on, then an ER35 (Panel no-weld error) is displayed.

5.2 Menu Navigation

Status Page List (Default)

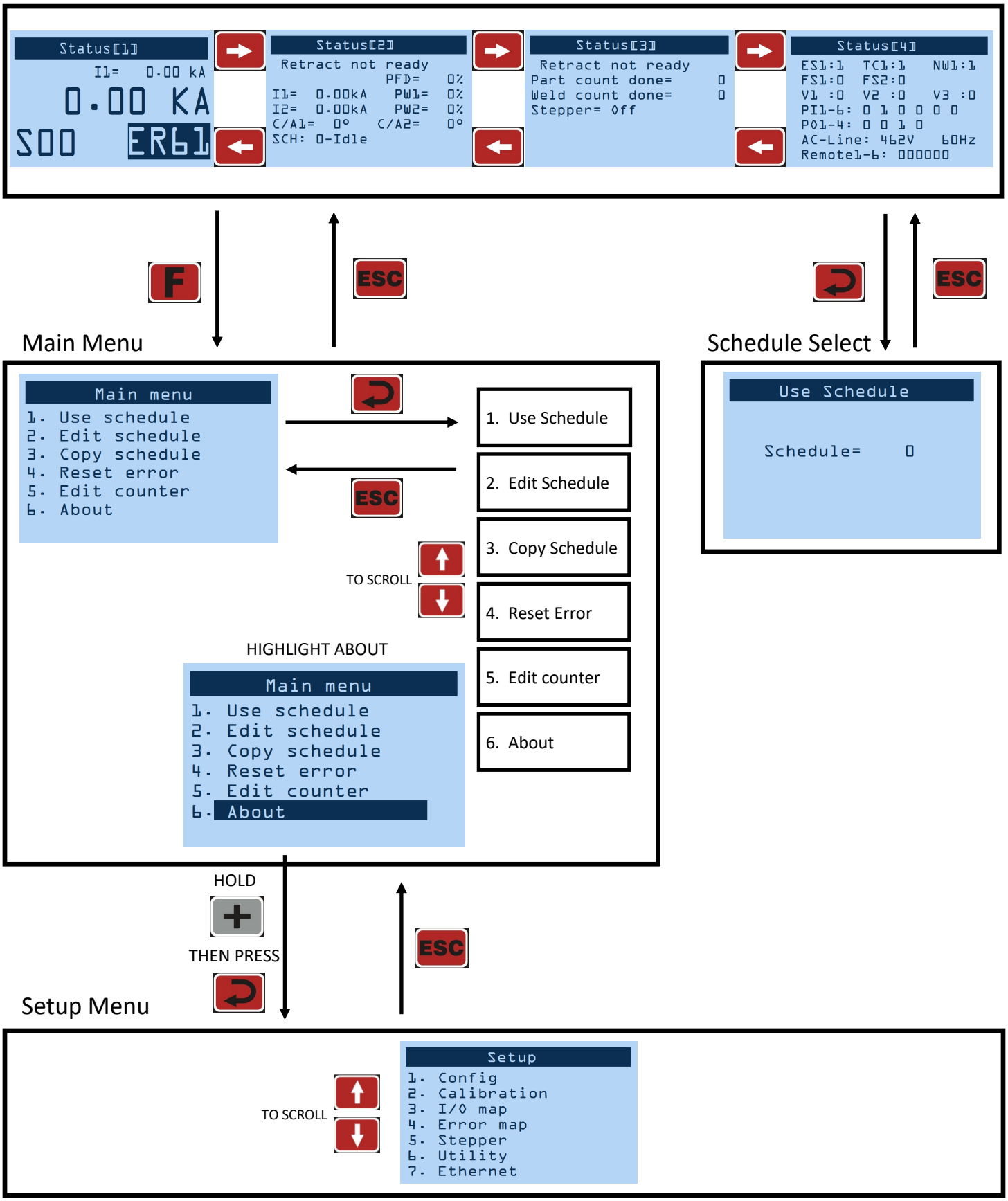

5.2.1 Status Screens—Status[1]

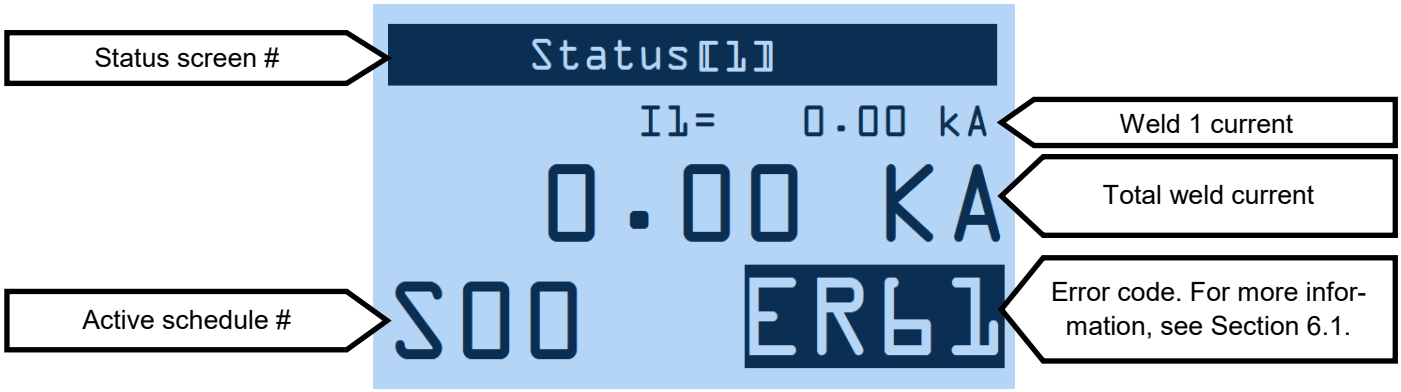

Main status screen.

To get to Status[4]:

or

To get to Status[2]:

or

5.2.1 Status Screens—Status[2]

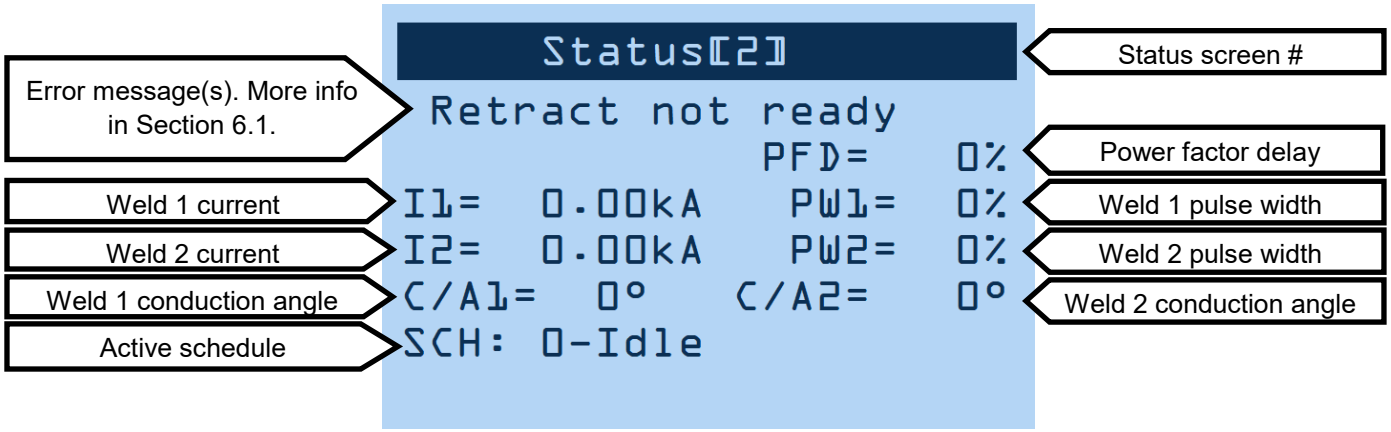

This screen displays the results of the last weld.

To get to Status[1]:

or

To get to Status[3]:

or

5.2.1 Status Screens—Status[3]

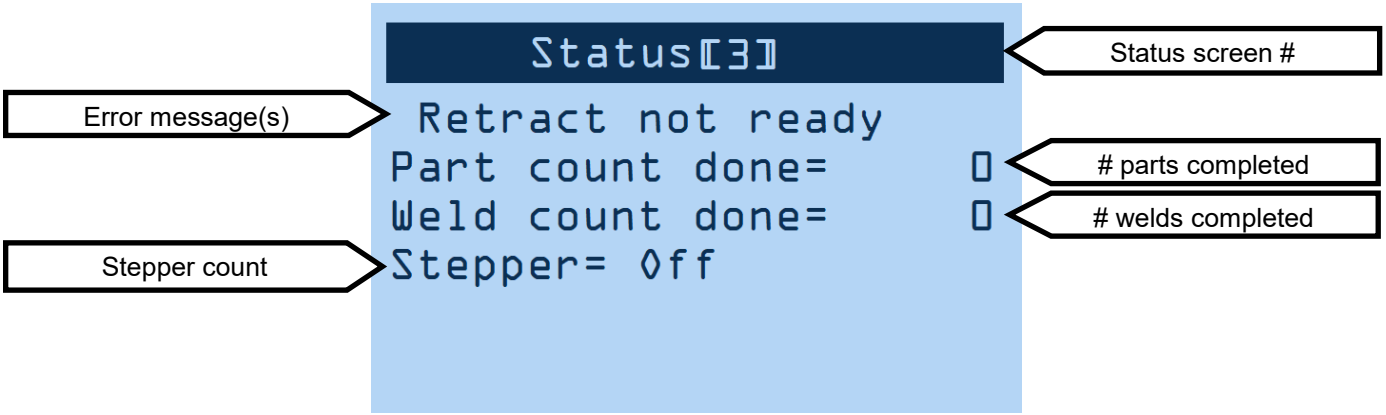

This screen displays the counts of the stepper and the counter, if they are enabled. If these features are disabled, this screen displays “Stepper=Off” and/or “Counter=Off” instead.

To get to Status[2]:

or

To get to Status[4]:

or

5.2.1 Status Screens—Status[4]

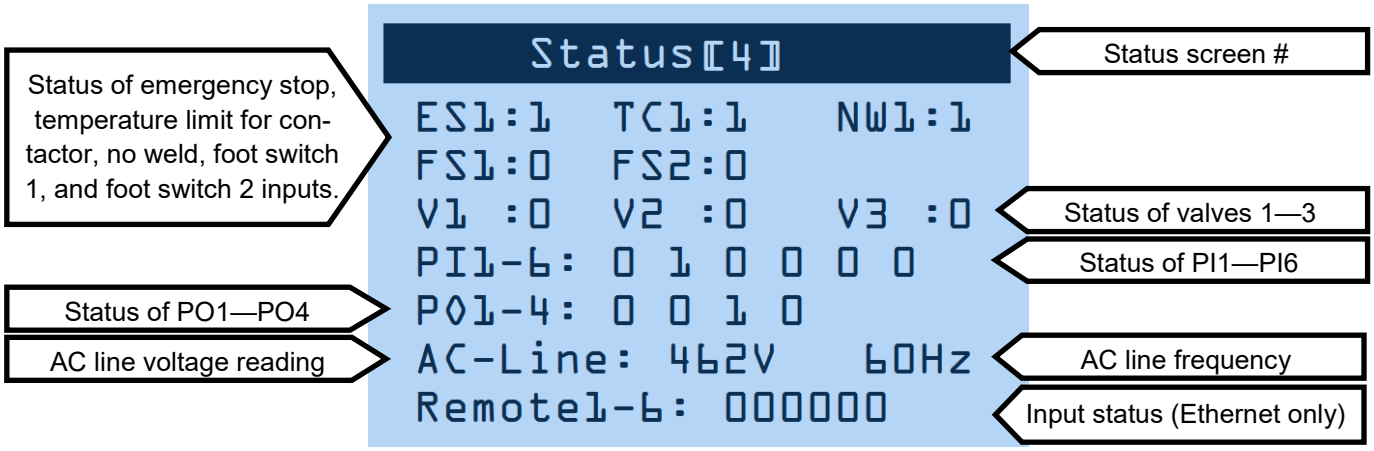

This screen displays the status of the control's inputs and outputs. HIGH signals are represented by a 1, and LOW signals are represented by a 0. Also displayed is the status of the AC line voltage/frequency.

To get to Status[3]:

or

To get to Status[1]:

or

5.2.2 Main Menu Screens—Use Schedule

Navigate to the ‘Use Schedule’ screen.

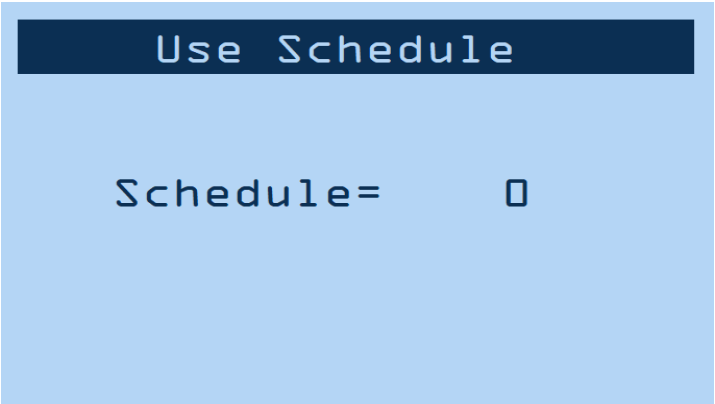

Schedule [0-63]

Default = 0

This selects the active schedule to be run. To save changes to this parameter, the key must be pressed. If schedule select is set to ‘External’ on the Config menu, then changes cannot be made unless set to ‘Internal’.

NOTE: Navigation to the ‘Use Schedule’ screen can be done two different ways:

1. Starting from the Status screens, press . (See Menu Navigation for details.)
2. Starting from the Status screens, press F and then select ‘Use Schedule’ from the Main Menu.

5.2.2 Main Menu Screens—Edit Schedule

Navigate to the ‘Edit Schedule’ screen.

```
Schedule
Schedule Number=    0
Squeeze delay=  99 Cyc
Squeeze=    60 Cycle
>Valve= 1+2+3
Weld1=      0 Cycles
>Mode=  Phase shift
>Heat=      0 %
```

```
Schedule
>Current=    0.00 kA
>I1 Monitor=  On
 >High=    0 %
 >Low=     0 %
 >Pre-low=0 %
 >Pre-low count=  0
>PW1 Monitor=  On
 >High=     0 %
```

```
Schedule
 >Low=      0 %
Cool1=      0 Cycles
Slope=      0 Cycles
Weld2=     10 Cycles
>Mode=   Phase shift
>Heat=      50 %
>Current=    0.00 KA
```

```
Schedule
>I2 Monitor=  On
 >High=    0 %
 >Low=     0 %
 >Pre-low=0 %
 >Pre-low count=  0
>PW2 Monitor=  On
 >High=     0 %
 >Low=      0 %
```

```
Schedule
Cool2=     30 Cycles
Hold=       0 Cycles
Off=       60 Cycles
Impulses=  1
I offset=    0 %
>Change all=  No
Cycle Mode=  Chained
```

Schedule Number [0-63]

Default = 0

In order to accept changes made to any field, the [ENTER] button must be pressed. It is important to make sure that the correct schedule number is selected AND accepted BEFORE completing all of the corresponding settings to follow.

Squeeze Delay [0-99] cycles

Default = 0

Additional time delay to be added to ‘Squeeze’. This is usually utilized when ‘Cycle Mode’ is set to repeat. The squeeze delay will only be applied to the first weld of the repeating cycle. Parameter is replaced by ‘Advance’ when ‘air-over-oil’ is enabled.

Squeeze [0-99] cycles

Default = 0

Time delay between the signal to the programmed valve(s) and weld initiation. Parameter is replaced by ‘Intensify’ when ‘air-over-oil’ is enabled.

>Valve [None/1/2/3/1+2/2+3/1+3/1+2+3]

Selection of valve(s) to be activated.

Weld 1 [0-99] cycles

Default = 0

Also referred to as “pre-heat”

5.2.2 Main Menu Screens—Edit Schedule

>Mode [Phase Shift/Const Current]

Current regulation mode of Weld 1.

- Phase Shift—welding current is not regulated
- Const Current—current is regulated

>Heat [0-99]%

Phase shift %. Does not apply when Current Mode is set to Const Current.

>Current [0.00-100.00] kA

Weld current setting. Does not apply when Mode is set to Phase Shift.

>I1 Monitor [On/Off]

Must be enabled in order to track/report current errors.

>>High [0-99]%

Default = 0

% current above programmed value that will trigger an error. Only visible when 'I1 Monitor' configuration is on.

>>Low [0-99]%

Default = 0

% current below programmed value that will trigger an error. Only visible when "I1 Monitor' is on.

>>Pre-low [0-99]%

Default = 0

% current below programmed value that will trigger ER44. Only visible when 'I1 Monitor' is on.

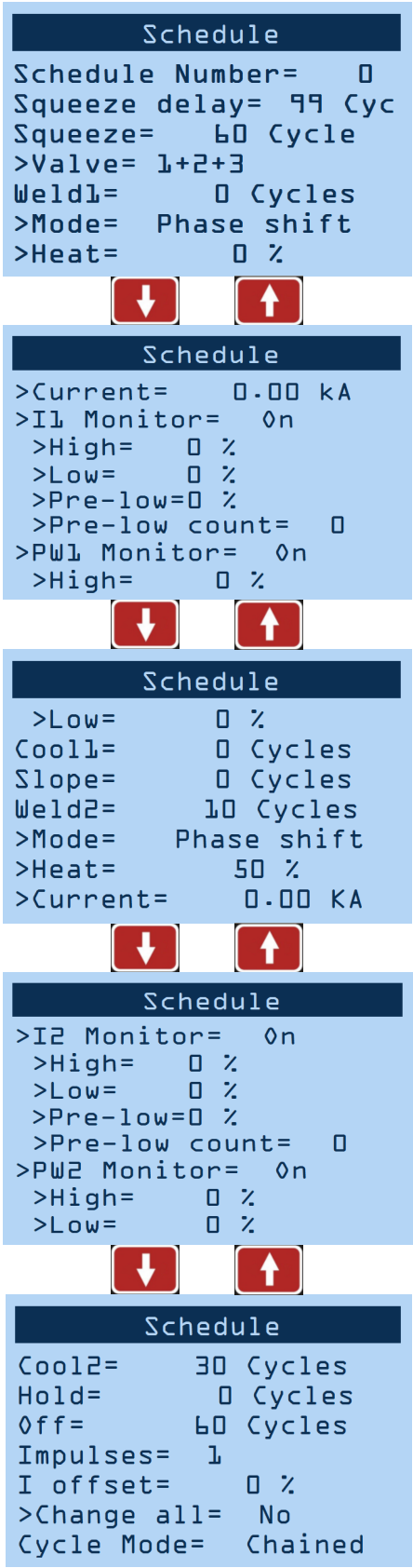

5.2.2 Main Menu Screens—Edit Schedule

>>Pre-low count [0-99] cycles

Default = 0

Number of ‘Weld 1’ cycles that must fall below the ‘Pre-low’ limit in order to trigger an error. Only visible when ‘I1 Monitor’ configuration is on.

>PW1 Monitor [On/Off]

Must be enabled in order to track/report phase shift abnormalities.

>>High [0-99]%

Default = 0

Maximum phase shift the control can apply in order to achieve the ‘Current’ setting without triggering an error. Only visible when ‘PW1 Monitor’ configuration is on.

>>Low [0-99]%

Default = 0

Minimum phase shift the control can apply in order to achieve the ‘Current’ setting without triggering an error. Only visible when ‘PW1 Monitor configuration is on.

Cool 1 [0-99] cycles

Default = 0

Time delay between ‘Weld 1’ and ‘Weld 2’. Designed to give an impulse effect.

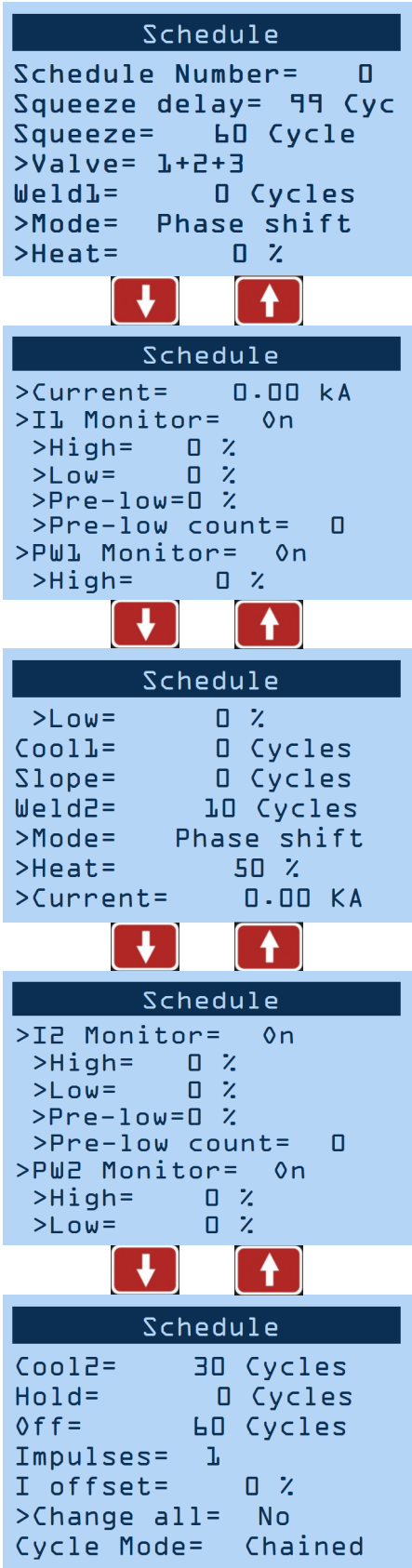

5.2.2 Main Menu Screens—Edit Schedule

Slope [0-99] cycles

Default = 0

The number of additional cycles between 'Weld 1' and 'Weld 2' in order to transition between the two gradually. A larger 'Weld 1' will result in a downslope; whereas a larger 'Weld 2' will result in an upslope.

Weld 2 [0-99] cycles

Default = 0

Also known as "main heat"

>Mode [Phase Shift/Const Current]

Current regulation mode of Weld 2.

- Phase Shift—welding current is not regulated
- Const Current—current is regulated

>Heat [0-99]%

Phase shift %. Does not apply when Current Mode is set to Const Current.

>Current [0.00-100.00] kA

Weld current setting. Does not apply when Mode is set to Phase Shift.

>I2 Monitor [On/Off]

Must be enabled in order to track/report current errors.

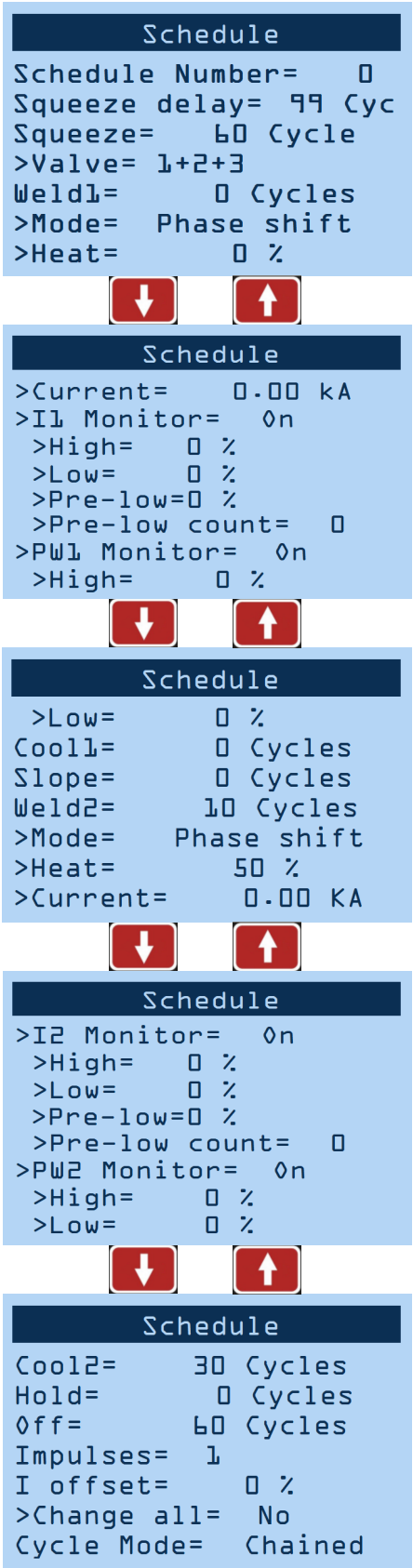

5.2.2 Main Menu Screens—Edit Schedule

>>High [0-99]%

Default = 0

% current above programmed value that will trigger an error. Only visible when ‘I2 Monitor’ configuration is on.

>>Low [0-99]%

Default = 0

% current below programmed value that will trigger an error. Only visible when ‘I2 Monitor’ configuration is on.

>>Pre-low [0-99] %

Default = 0

% current below programmed value that will trigger ER46. Only visible when ‘I2 Monitor’ configuration is on.

>>Pre-low count [0-99] cycles

Default = 0

Number of ‘Weld 2’ cycles that must fall below the ‘Pre -low’ limit in order to trigger an error. Only visible when ‘I2 Monitor’ is on.

>PW2 Monitor [On/Off]

Must be enabled in order to track/report phase shift abnormalities.

>>High [0-99]%

Default = 0

Maximum phase shift the control can apply in order to achieve the ‘Current’ setting without triggering an error. Only visible when “PW2 Monitor’ is on.

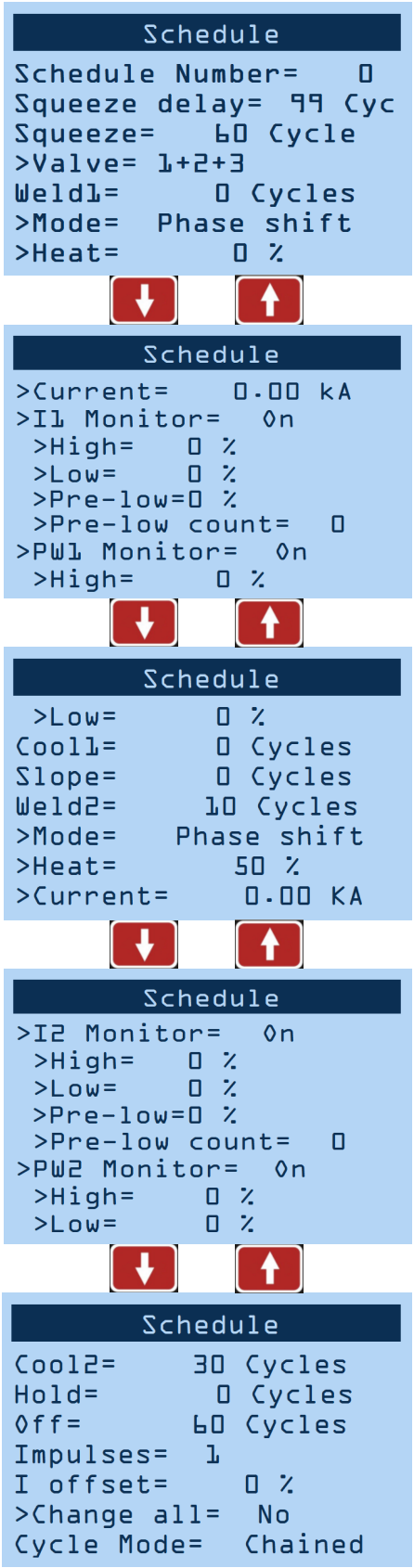

5.2.2 Main Menu Screens—Edit Schedule

>>Low [0-99]%

Default = 0

Minimum phase shift the control can apply in order to achieve the ‘Current’ setting without triggering an error. Only visible when ‘PW2 Monitor’ configuration is

Cool 2 [0-99] cycles

Default = 0

Primarily used when applying multiple impulses; time delay following each ‘Weld 2’ impulse.

Hold [0-99] cycles

Default = 0

Time delay during which the electrodes remain in contact with the part being welded to allow weld nugget to congeal.

Off [0-99] cycles

Default = 0

Time delay following ‘Hold’ cycle in which the valve (s) release; the next schedule/sequence will not begin until the ‘Off’ cycle is complete.

Impulses [1-99] cycles

Default = 1

Number of times to deliver Weld 2—Cool 2. (Impulses do NOT apply to Weld 1—Cool 1.)

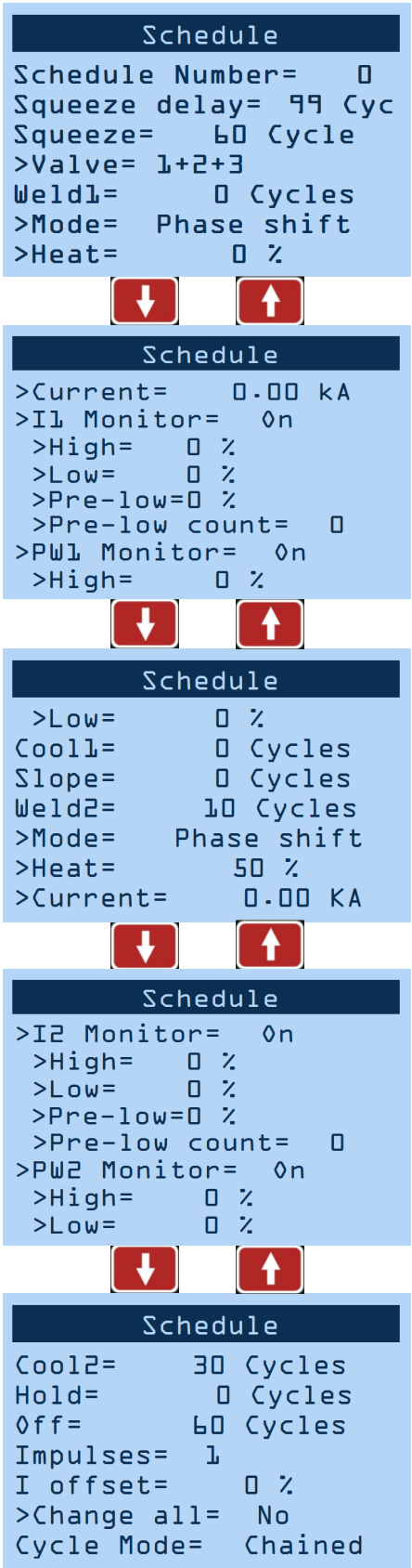

5.2.2 Main Menu Screens—Edit Schedule

I offset [up to -15% through +15%]

Adjustable increase or decrease to total current delivered by a sequence. This is one of the few adjustable parameters when control is locked. Only visible when 'Max I offset' is not "0". Range is dependent on what 'Max I offset' is set to in the Config menu.

>Change all [Yes/No]

- Yes—'I offset' will be applied to all schedules
- No—'I offset' will only be applied to the current schedule

Cycle Mode [Non-Repeat/Repeat/ Chained/Successive/ Wait Here]

- Non-Repeat—Control can be initiated for only one sequence/schedule even if initiation remains close.
- Repeat—Sequences/schedules will continue if initiation remains closed.
- Chained—Schedules are chained together so that consecutive schedules will be sequenced from one initiation.
- Successive—Schedules are chained together so that consecutive schedules will be sequenced from separate initiations.
- Wait Here—Only applies when certain parameters (Presqueeze, Squeeze, Weld 1, Cool 1, Weld 2, Cool 2, or Hold) are set to 99 cycles. This allows infinite duration until Escape is triggered. 'Beat Mode' configuration is authorized to 'Wait Here' if this Cycle mode is desired.

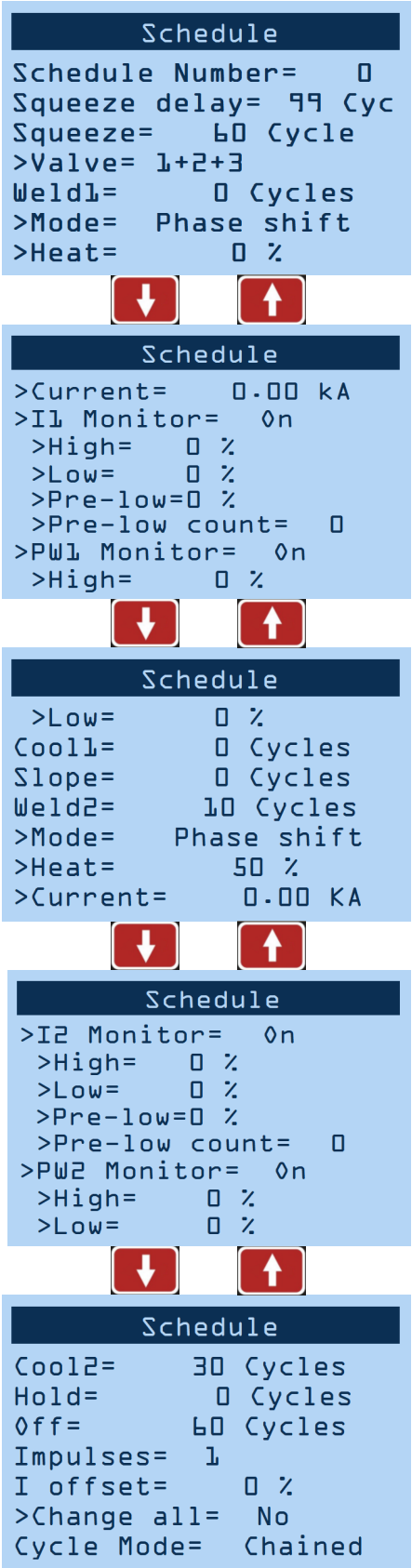

5.2.2 Main Menu Screens—Edit Schedule

```
Schedule
Schedule Number=    0
Squeeze delay=  99 Cyc
Squeeze=    60 Cycle
>Valve= 1+2+3
Weld1=      0 Cycles
>Mode=  Phase shift
>Heat=       0 %
```

'Air-over-oil' configuration enabled

```
Schedule
Schedule Number=    0
Advance=         99 Cyc
Intensify= 60 Cycle
>Valve= 1+2+3
Weld1=      0 Cycles
>Mode=  Phase shift
>Heat=       0 %
```

```
Schedule
Hold=       0 Cycles
Off=       60 Cycles
Impulses=  1
I offset=     0 %
>Change all=  No
Block Delay=    0 Cyc
Cycle Mode=  Chained
```

Advance [0-99] cycles

Default = 0

Time delay to allow advancement of the cylinder using oil pressure only. Only visible when 'air-over-oil' configuration (Mode1 or Mode2) is selected. Otherwise, parameter is replaced by Squeeze Delay.

Intensify [0-99] cycles

Default = 0

Time delay to allow force buildup of the cylinder using air pressure. Only visible when 'air-over-oil' configuration (Mode1 or Mode2) is selected. Otherwise, parameter is replaced by Squeeze.

Block Delay [0-99] cycles

Default = 0

Timed delay to allow high force of the cylinder to release air pressure after the welding process. Only visible when 'air-over-oil' configuration (Mode2 only) is selected.

5.2.2 Main Menu Screens—Copy Schedule

Navigate to the ‘Copy schedule’ screen.

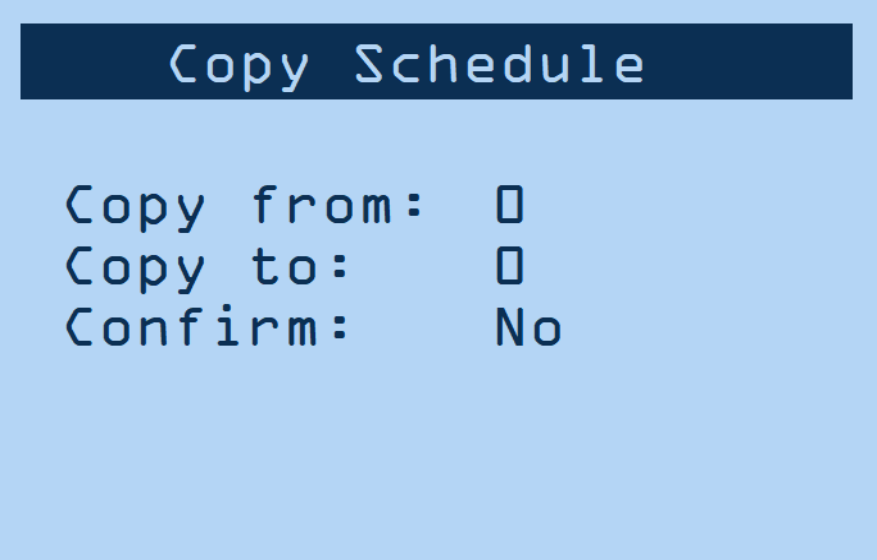

Copy From [0-63]

of the schedule to be copied.

Copy To [0-63]

of the schedule to be replaced.

Confirm [Yes/No]

Must select ‘Yes’ and press the key to complete the above copy/replace. ‘DONE!!!’ will appear in the title bar once complete.

5.2.2 Main Menu Screens—Reset Error

Navigate to the ‘Reset error’ screen.

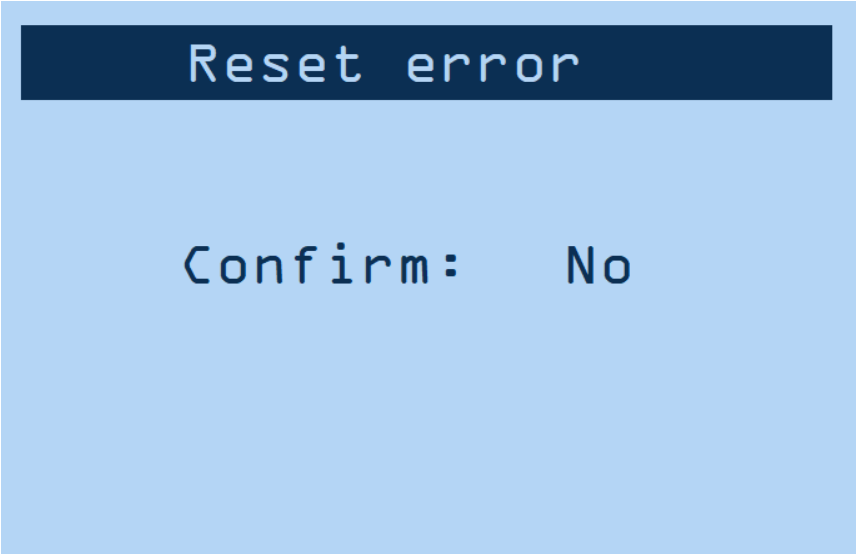

Confirm [Yes/No]

Must select ‘Yes’ and press the key to complete the above copy/replace. ‘DONE!!!’ will appear in the title bar once complete.

5.2.2 Main Menu Screens—Edit Counter

Navigate to the ‘Edit counter’ screen.

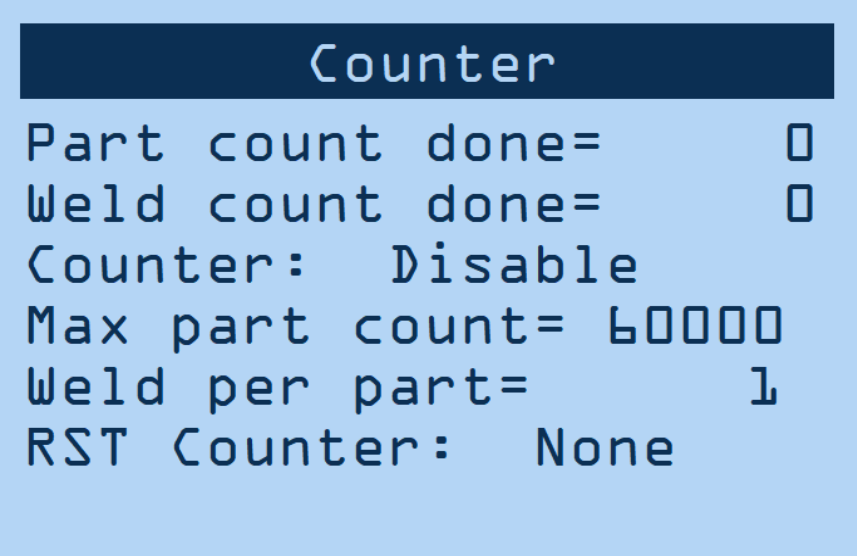

Counter [Enable/Disable]

- Enable—’Weld count done’ will increment with each weld delivered. Error ‘ER25’ will be reported when ‘Max part count’=‘Part count done’.

Max part count [0-60,000]

Default = 60,000

Number at which the ‘part count done’ reports ‘ER25’.

Weld per part [1-9,999]

Default = 1

The number of welds to increment ‘part count done’ by one.

RST Counter [None/PCTR/WCTR/Both]

Resets counter.

- PCTR—part counter
- WCTR—weld-per-part counter

5.2.2 Main Menu Screens—About

Navigate to the ‘About’ screen.

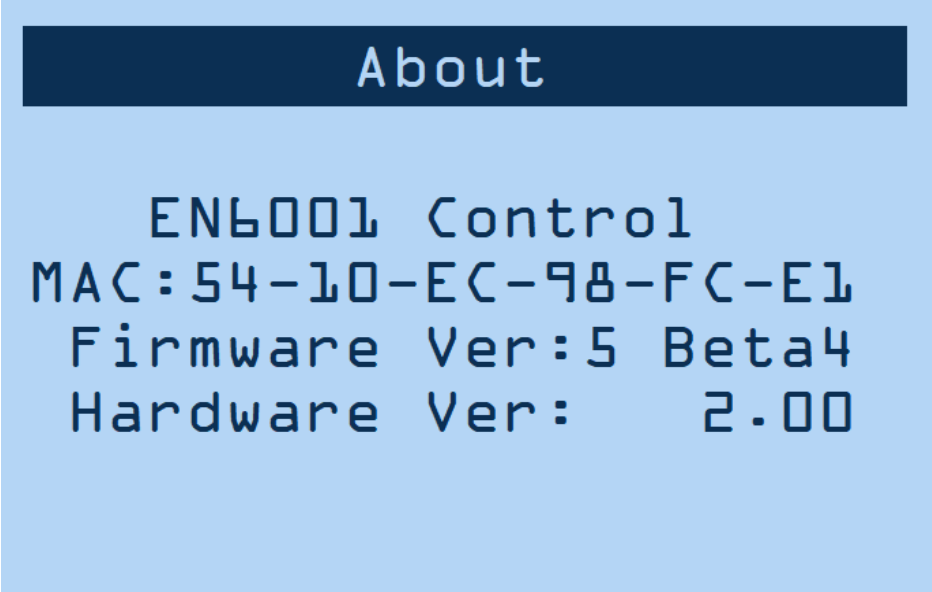

This screen displays firmware and hardware information. The information on this screen cannot be changed using the keypad. For more information on updating firmware, see Section 5.2.4.

5.2.3 Setup Menu Screens—Config

Navigate to the ‘Config’ screen. (See Menu Navigation for details.)

Weld Mode [Spot/Seam1/Seam2]

- Spot—Standard squeeze, weld, hold, and off sequence.
- Seam1—When FS1 or FS2 input is toggled, control will run ‘schedule’ from ‘Squeeze Delay’ through ‘Cool 2’. If FS1 or FS2 input is held, control will repeat ‘Weld 2’ and ‘Cool 2’.
- Seam2—FS1 initiation implements same function as in Seam1. FS2 and schedule 20 will always initiate ‘Spot’ Weld Mode.

Retraction [Off/Maintained/Momentary]

- Maintained—Retraction output directly reflects retraction input.
- Momentary—Retraction output changes state with a toggled impulse to the retraction input.

This parameter is ignored if ‘Beat Mode’ is enabled.

On Error [Continue/Head Lock/Stop]

- Continue—Further welds are permitted regardless of previous weld status.
- Head Lock—When a major error occurs, valve signal(s) are held on. An Escape input is required to release the valve output(s). Additional welds are not permitted until Error Reset occurs.
- Stop—On error, valve signal(s) turn off as normal. Additional welds are not permitted until Error Reset occurs.

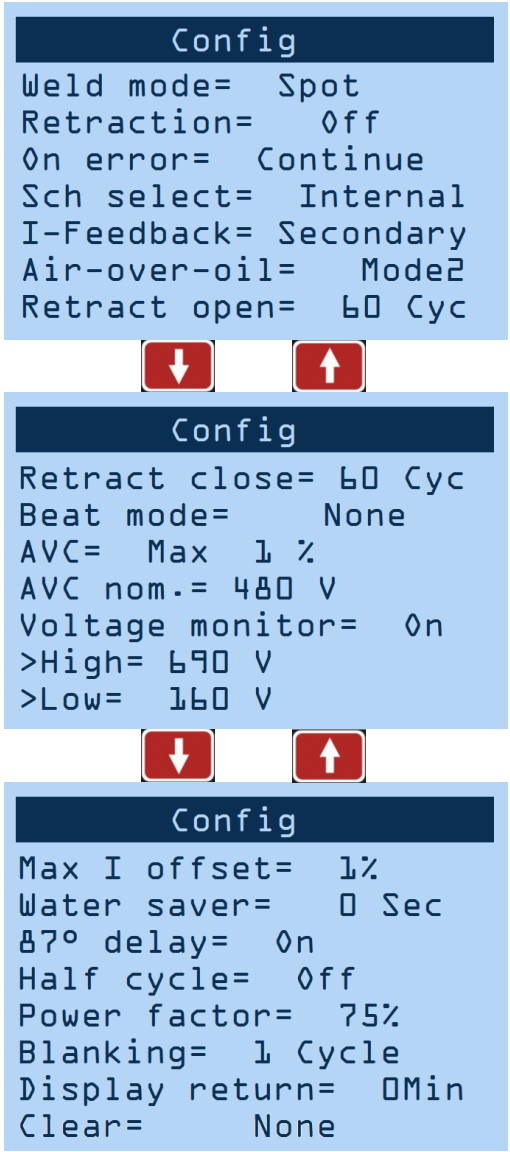

5.2.3 Setup Menu Screens—Config

Sch Select [Internal/External]

- Internal—FS1 will initiate the programmed weld schedule number.
- External—FS1 will initiate the weld schedule number according to the binary value represented by PI3, PI4, PI5, and PI6.

(FS2 will always initiate weld schedule 20.)

I-Feedback [Primary/Secondary/No Coil]

This setting should correspond to the physical location of the sensing coil.

Air-over-oil [Off/Mode 1/Mode 2]

- Mode 1—air-over-oil setting without retraction
- Mode 2—air-over-oil setting with retraction enabled using 'Retract Open' and 'Retract Close' settings.

Retract Open [0-99] cycles

Default = 0

Time delay to allow for retraction from 'pre-weld' position to 'fully open' position. Only appears when 'air-over-oil' is set to 'Mode 2'.

Retract Close [0-99] cycles

Default = 0

Time delay to allow for closure from 'fully open' position to 'pre-weld' position. Only appears when 'air-over-oil' is set to 'Mode 2'.

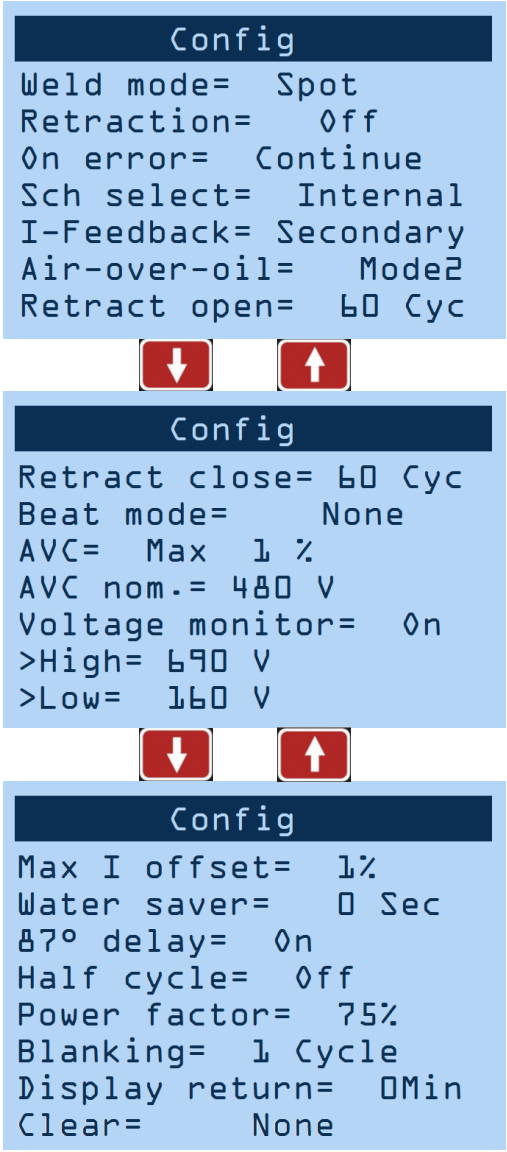

5.2.3 Setup Menu Screens—Config

Beat Mode [Off/Squeeze/Sqz. + Weld/ Wait Here]

- Off—Sequence/schedule will complete with a momentary activation of FS1 or FS2.
- Squeeze—Sequence/schedule requires continuous activation of FS1 or FS2 until the squeeze sequence is complete, otherwise the sequence will terminate.
- Sqz. + Weld—Welding sequence requires continuous activation of FS1 or FS2 until the weld sequence is complete, otherwise the sequence will terminate.
- Wait Here—Welding sequence requires continuous activation of FS1 or FS2 until the weld sequence is complete, otherwise the sequence will temporarily pause (retraction will occur). This setting requires the active schedule's 'Cycle Mode' to also be set to 'Wait Here'.

AVC [Disabled/Max [1-10]%]

Automatic Voltage Compensation—defines how far off the AC line voltage can be from the programmed AVC nom. value before ER32 is displayed. Only operates if enabled.

AVC nom. [187-633] volts

Default = 480

Supply voltage on which the control is designed to operate. Parameter is only visible when 'AVC' is enabled.

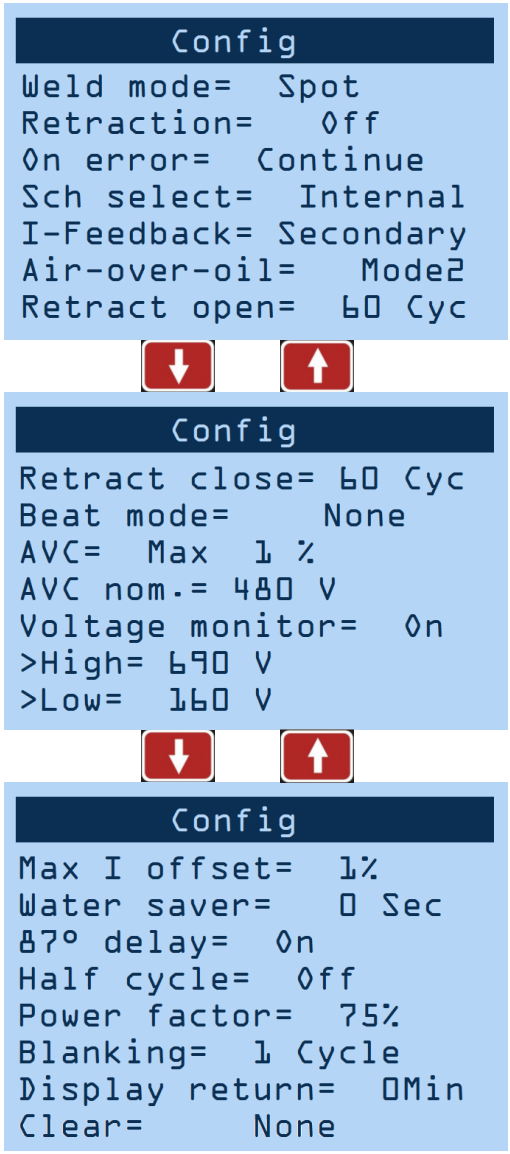

5.2.3 Setup Menu Screens—Config

Voltage monitor [On/Off]

- On—High and Low voltage errors are enabled using the following parameters.

>High [160-690] volts

Default = 690

Error 'ER23' will be triggered if supply voltage is above the set value. Parameter is only visible when "Voltage monitor' is on.

>Low [160-690] volts

Default = 160

Error 'ER24' will be triggered if supply voltage is below the set value. Parameter is only visible when 'Voltage monitor' is on.

Max I offset [0-15]%

Determines the input range for 'I offset' parameter. For example, if 'Max I offset' is 6%, 'I offset' input range is –6% to +6%.

Water saver [0-199] sec

Default = 0

Time duration that the water flow signal will remain on following a weld. Feature available on PO3.

87° delay [On/Off]

- On—the first half cycle is delated 87 degrees (51.6% max) phase shift in order to minimize saturation of the weld transformer.

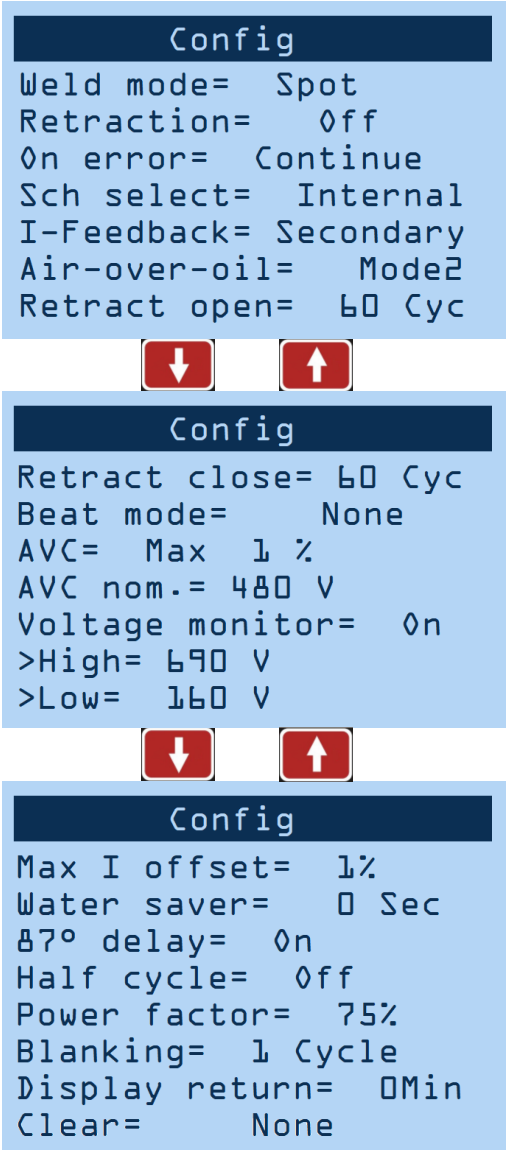

5.2.3 Setup Menu Screens—Config

Half Cycle [Off/+/-/AC]

- '+'—Only the positive half cycle is output.
- '-'—Only the negative half cycle is output.
- AC—Alternating positive/negative half cycles are output.

Power factor [0-99]%

Default = 75%

- '0'—'Automatic Power Factor' mode.
- '1-99'—Manual power factor delay. Value must be determined by the Power Factor Delay and will vary for each machine.

Blanking [0-99] cycles

Default = 0

The number of weld cycles to exclude from measurement and limit testing.

Display return [0-10] min

Default = 0

- '0'—Disabled

Length of time before the display returns to 'Status Page 1'.

Clear [None/IO Map/Calibration/Config/ Stepper/Counter/Schedule/ All]

Clearing data from this menu does not require a confirmation. 'DONE!!!' will appear in the title bar as verification.

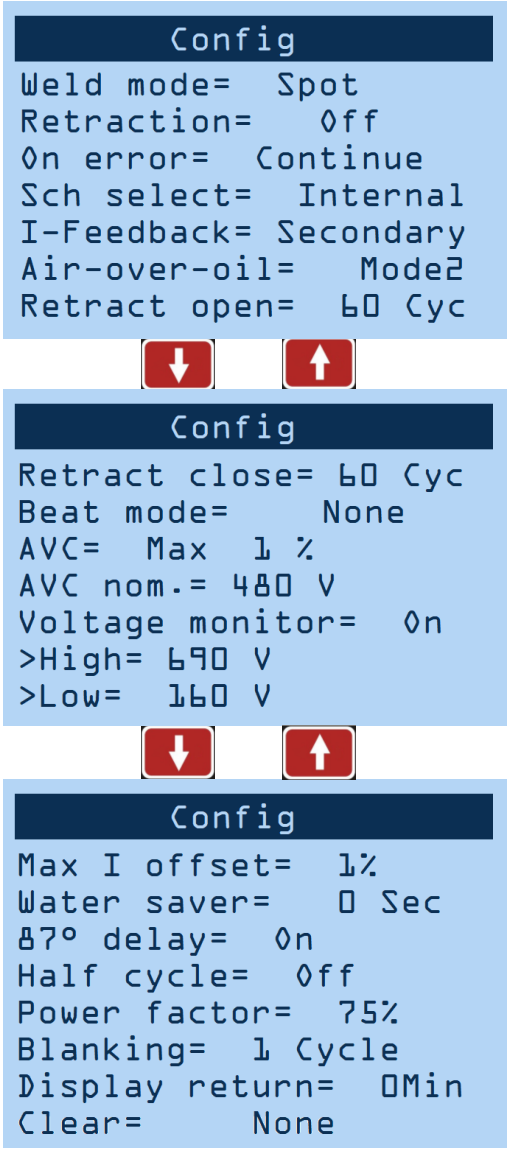

5.2.3 Setup Menu Screens—Calibration

Navigate to the ‘Calibration’ screen.

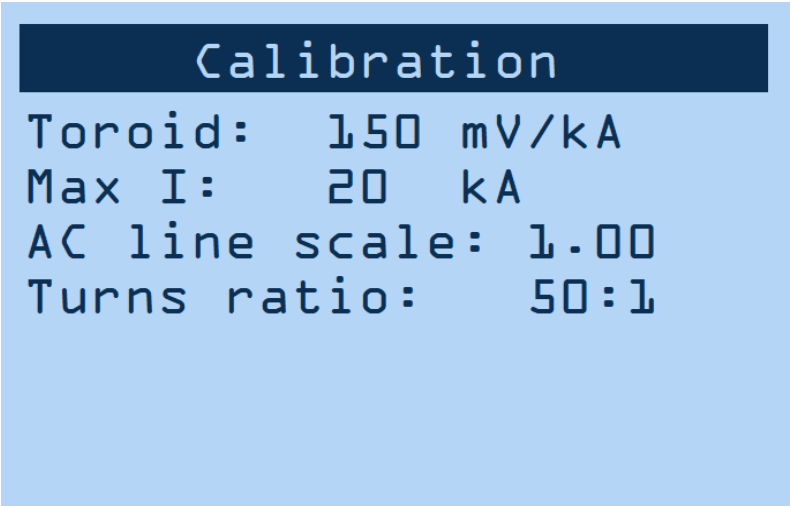

Toroid (Primary Sensing) [1260-1540] mV/kA

Default = 1400

For accurate current monitoring.

Toroid (Secondary Sensing) [135-165] mV/kA

Default = 150

For accurate current monitoring.

Max I [6-100] kA

Default = 20

AC line scale [0.8-1.2]

Default = 1.0

For accurate voltage monitoring.

Turns ratio [10-255]

Default = 50

Turns ratio of welding transformer.

5.2.3 Setup Menu Screens—I/O Map

Navigate to the 'I/O Map' screen.

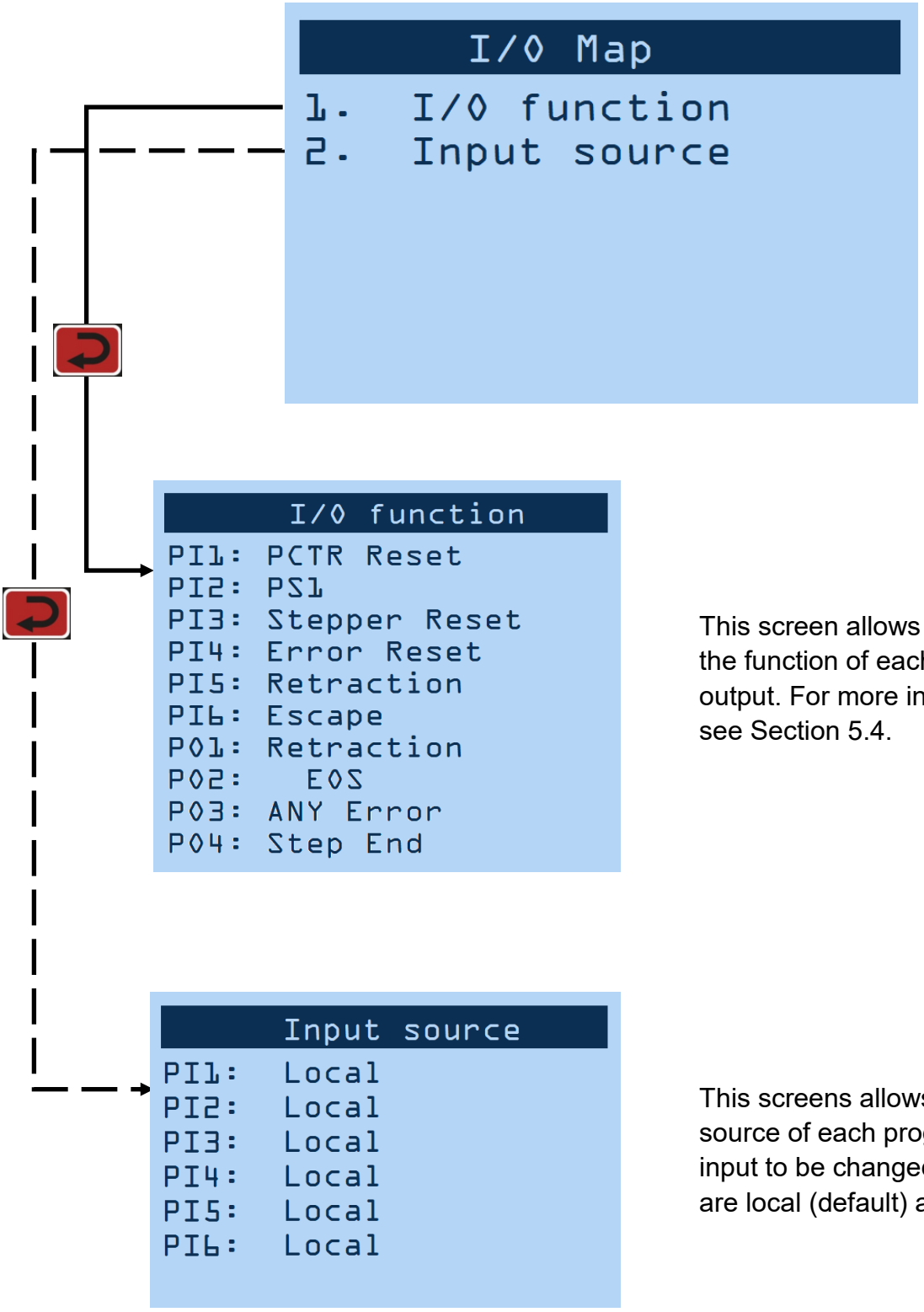

This screen allows you to set the function of each input and output. For more information, see Section 5.4.

This screens allows for the input source of each programmable input to be changed. The options are local (default) and remote.

5.2.3 Setup Menu Screens—Error Map

Navigate to the ‘Error Map’ Screen.

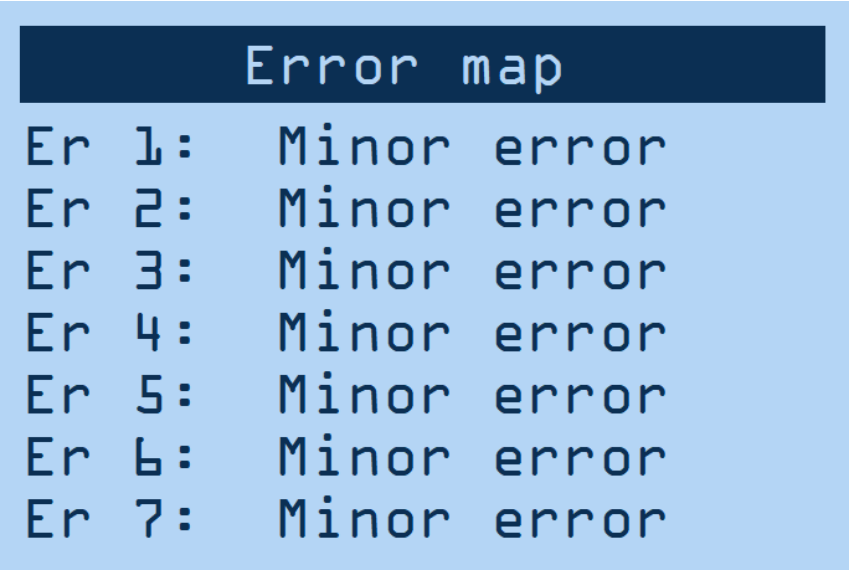

This screen allows you to set each error message as ‘Major’ or ‘Minor’. All messages are set to Minor by default. For more detailed information on each error message, see Section 6.1.

5.2.3 Setup Menu Screens—Stepper

As the electrode face(s) “mushroom” over time, the programmed weld current needs to increase to maintain the desired current density. The Stepper function provides this incremental increase in current over the course of up to ten steps. Below is an example of using 8 steps and the corresponding output curve.

STEP	COUNT	Heat+	Current+
01	1000	6	2.3
02	1000	11	4.4
03	1000	14	5.5
04	1000	17	6.75
05	1000	19	7.75
06	1000	22	8.75
07	1000	24	9.5
08	1000	25	10
09	0	0	0
10	0	0	0

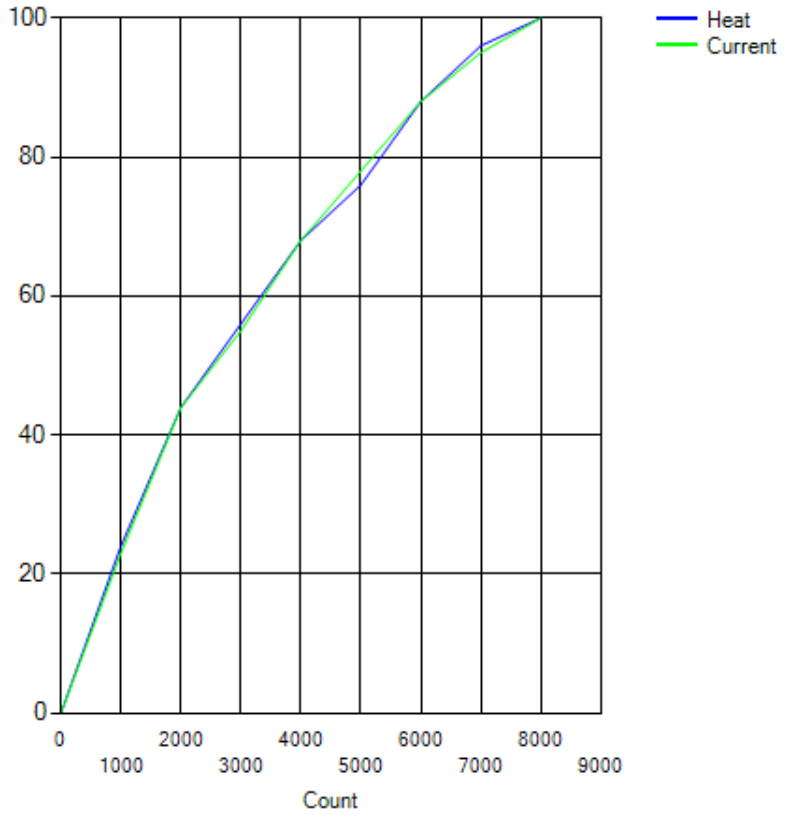

Note: RST Stepper input, Step End output, and Tip dressing pre-warn are recommended when utilizing the Stepper function.

The diagram above is intended to demonstrate a resulting welding timing cycle using the attached parameters; it is not recommended as part of a functional weld schedule.

5.2.3 Setup Menu Screens—Stepper

Navigate to the ‘Stepper’ screen.

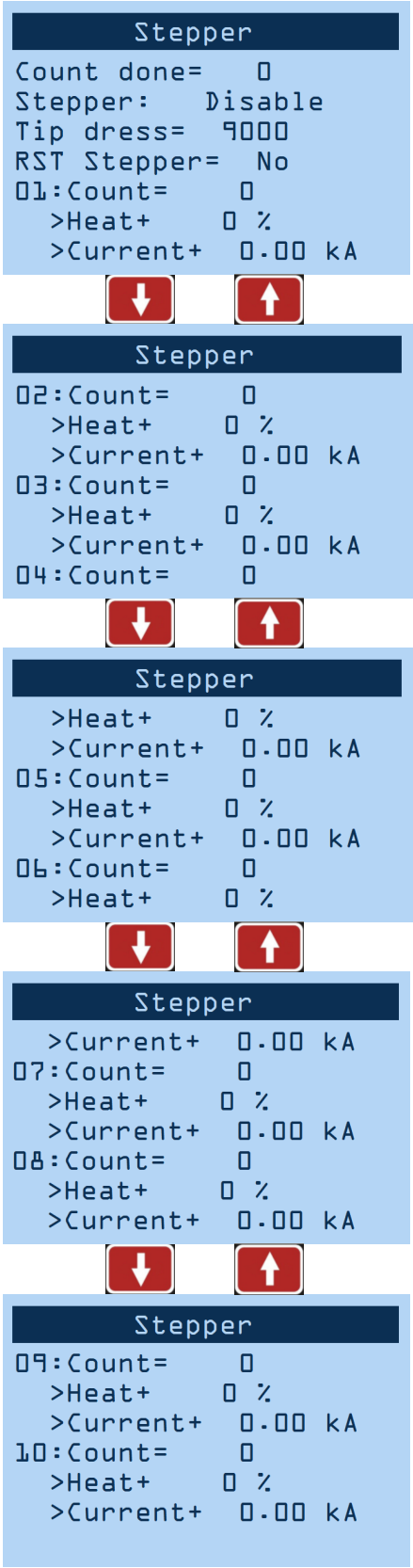

Count done [0-9,999]

The number of welds performed since the last RST Stepper.

Stepper [Disable/Heat-Current]

- Heat/Current—Stepper function is enabled; Weld schedules that have constant current enabled will utilize only the programmed Current setting. Weld schedules that have phase shift mode enabled will only utilize the Heat setting.

Tip dress [0-9,999]

Default = 9,000

When ‘Count Done’ = ‘Tip dress’, ER31 will trigger.

RST Stepper [No/Yes]

Selecting ‘Yes’ and pressing the ENTER key will reset the ‘Count Done’ to zero.

01:Count [0-9,999]

The number of welds before the additional Heat+ or Current+ setting is reached. The incrementing output is linear and therefore will result in a gradual increase over each weld delivered.

Heat+ [0-99]%

The additional percentage of phase shift to be added to Weld1 and Weld2 of the weld schedule.

Current+ [0-99.99]kA

The additional current to be added to Weld1 and Weld2 of the weld schedule.

5.2.3 Setup Menu Screens—Utility

Navigate to the ‘Utility’ screen.

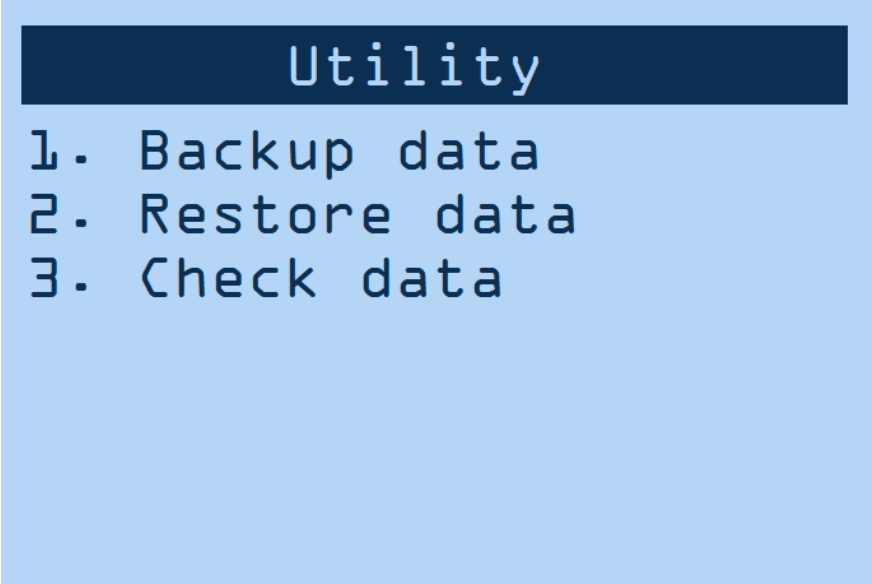

This screen contains the Utility menu. For more detailed information on backing up and restoring data, please see Section 5.2.4.

5.2.3 Setup Menu Screens—Ethernet

Navigate to the ‘Ethernet’ Screen.

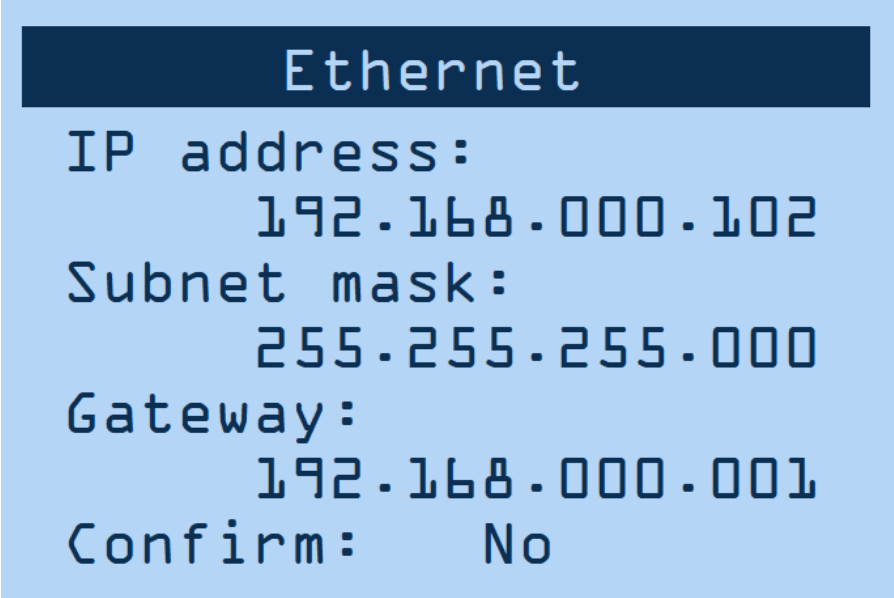

This screen displays information related to Ethernet communication with the control, including the control’s IP address. The information on this screen can be changed using the keypad.

5.2.4 Other Menus—Saving Schedules

Step 1: Insert a formatted USB drive into the USB port on the control panel

Step 2: From the 'Setup Menu' (see Section 5.2 for more information on navigating menus) select 'Utility'

```
Setup
1. Config
2. Calibration
3. I/O map
4. Error map
5. Stepper
6. Utility
7. Ethernet
```

Step 3: Select 'Backup Data'

```
Utility
1. Backup data
2. Restore data
3. Check data
```

Step 4: Rename file using and

Step 5: Set 'Confirm' to "YES" using and

```
Backup Data

File:    EN600100
Confirm:  YES

USB:     Ready
```

Step 6: Press and verify that 'DONE!!!' appears in the top left corner of the title bar

```
Done !!!

File:    EN600100
Confirm:    No

USB:     Ready
```

5.2.4 Other Menus—Loading Schedules

Step 1: Insert a USB drive with a previously saved backup file* into the USB port on the control panel

Step 2: From the 'Setup Menu' (see Section 5.2 for more information on navigating menus) select 'Utility'

```
Setup
1. Config
2. Calibration
3. I/O map
4. Error map
5. Stepper
6. Utility
7. Ethernet
```

Step 3: Select 'Restore Data'

```
Utility
1. Backup data
2. Restore data
3. Check data
```

Step 4: Select the desired filename* using and

Step 5: Set 'Confirm' to "YES" using and

```
Restore Data

File:    EN600100
Confirm:  YES

USB:     Ready
```

Step 6: Press and verify that 'DONE!!!' appears in the top left corner of the title bar

```
Done !!!

File:    EN600100
Confirm:    No

USB:     Ready
```

*Note: The backup file must be on the root directory of the USB drive. And the filename must be EN6001**00**.EN6 to EN6001**99**.EN6

5.2.4 Other Menus—Update Firmware

Step 1: Ensure the control is completely powered down.
Step 2: Insert a USB drive with EN6001 firmware into the USB power on the control panel.

Step 3: Press and hold + and −

Step 4: Power on the control. Once the Bootloader Menu appears, release + and −

Step 5: Select 'Refresh firmware'

Step 6: Select the desired filename* using + and −

```
Bootloader Menu

1. Refresh firmware
2. Execute firmware
3. Unlock control
4. About
```

```
Refresh firmware

File:    EN600100
Confirm:   YES

USB:     Ready
```

Step 7: Set 'Confirm' to "YES" using + and −

Step 8: Press and ↩ the control will begin updating

```
Refresh firmware

File:    EN600100
Confirm:  YES

USB:     Ready
```

Step 9: In order to return to the 'Main Menu' either

1. Temporarily power down the control

OR

2. Go back to 'Bootloader Menu' by pressing ESC

Then, select 'Execute firmware' and select 'YES'

```
Done !!!

File:    EN600100
Confirm:    No

USB:     Ready
```

*Note: The firmware file must be on the root directory of the USB drive, and the filename will be E061**1001**.BIN to E061**9999**.BIN

(this may requiring the extraction of a zip file)

5.3 Timing Cycles

(traditional spot weld)

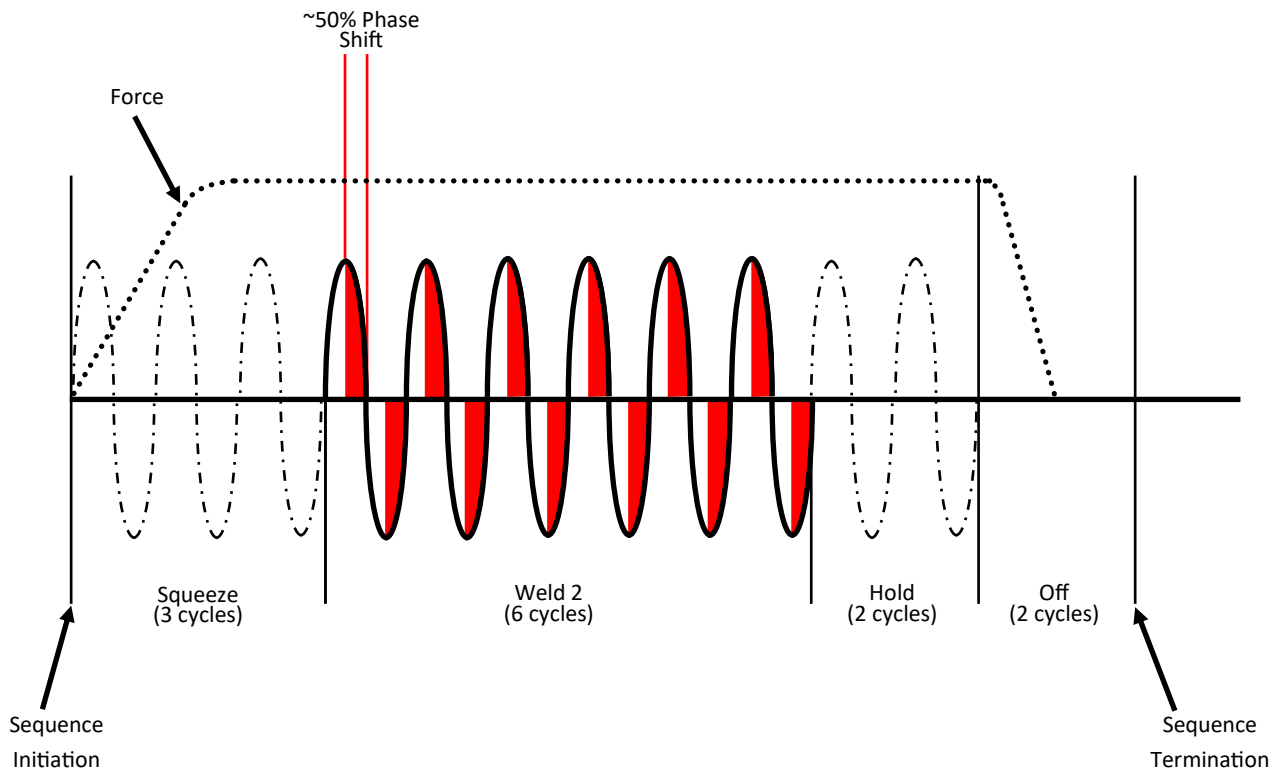

PARAMETER	SETTING
Squeeze Delay	0 cycles
Squeeze	3 cycles
Weld 1	0 cycles
Cool 1	0 cycles
Slope	0 cycles
Weld 2	6 cycles
>Mode	Phase Shift
>Heat	50 %
Cool 2	0 cycles
Hold	2 cycles
Off	2 cycles
Impulses	1 cycle

The diagram above is intended to demonstrate a resulting welding timing cycle using the attached parameters; it is not recommended as part of a functional weld schedule.

5.3 Timing Cycles

(multiple impulses)

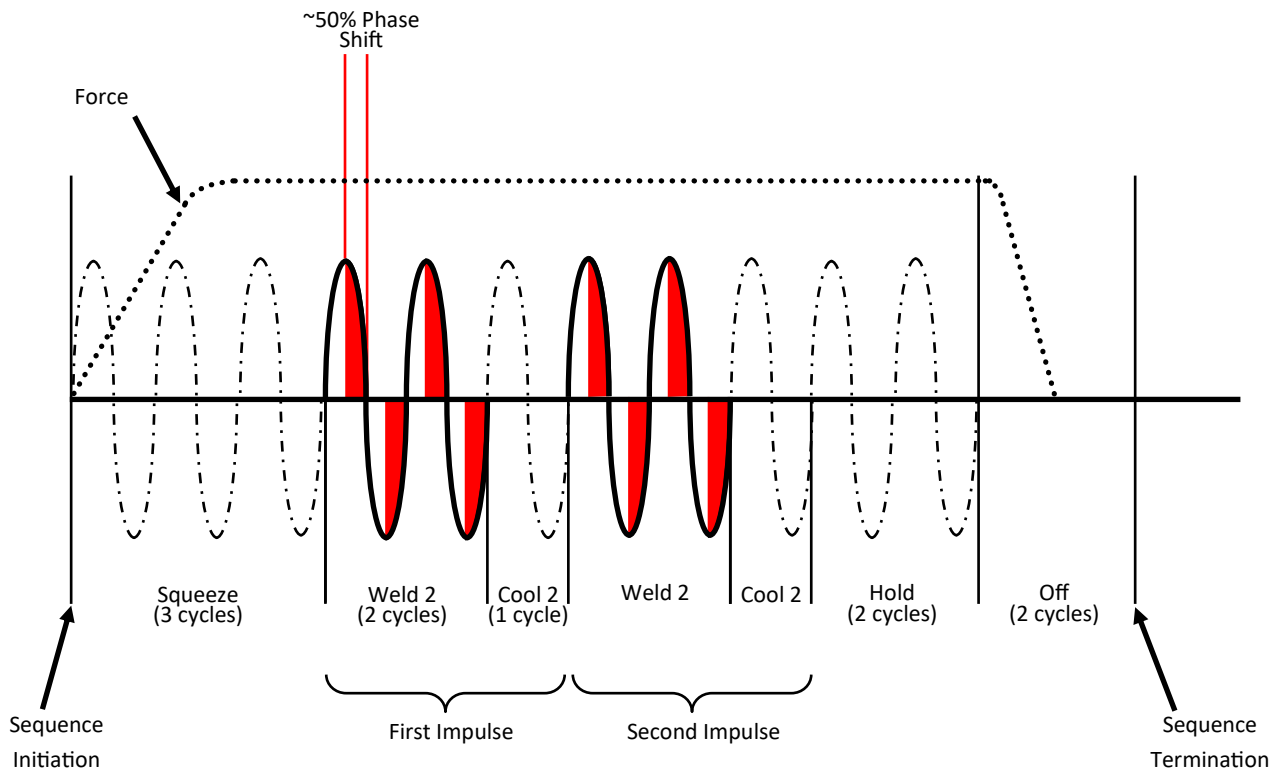

PARAMETER	SETTING
Squeeze Delay	0 cycles
Squeeze	3 cycles
Weld 1	0 cycles
Cool 1	0 cycles
Slope	0 cycles
Weld 2	2 cycles
>Mode	Phase Shift
>Heat	50 %
Cool 2	1 cycle
Hold	2 cycles
Off	2 cycles
Impulses	2 cycles

The diagram above is intended to demonstrate a resulting welding timing cycle using the attached parameters; it is not recommended as part of a functional weld schedule.

5.3 Timing Cycles

(“wait here” weld)

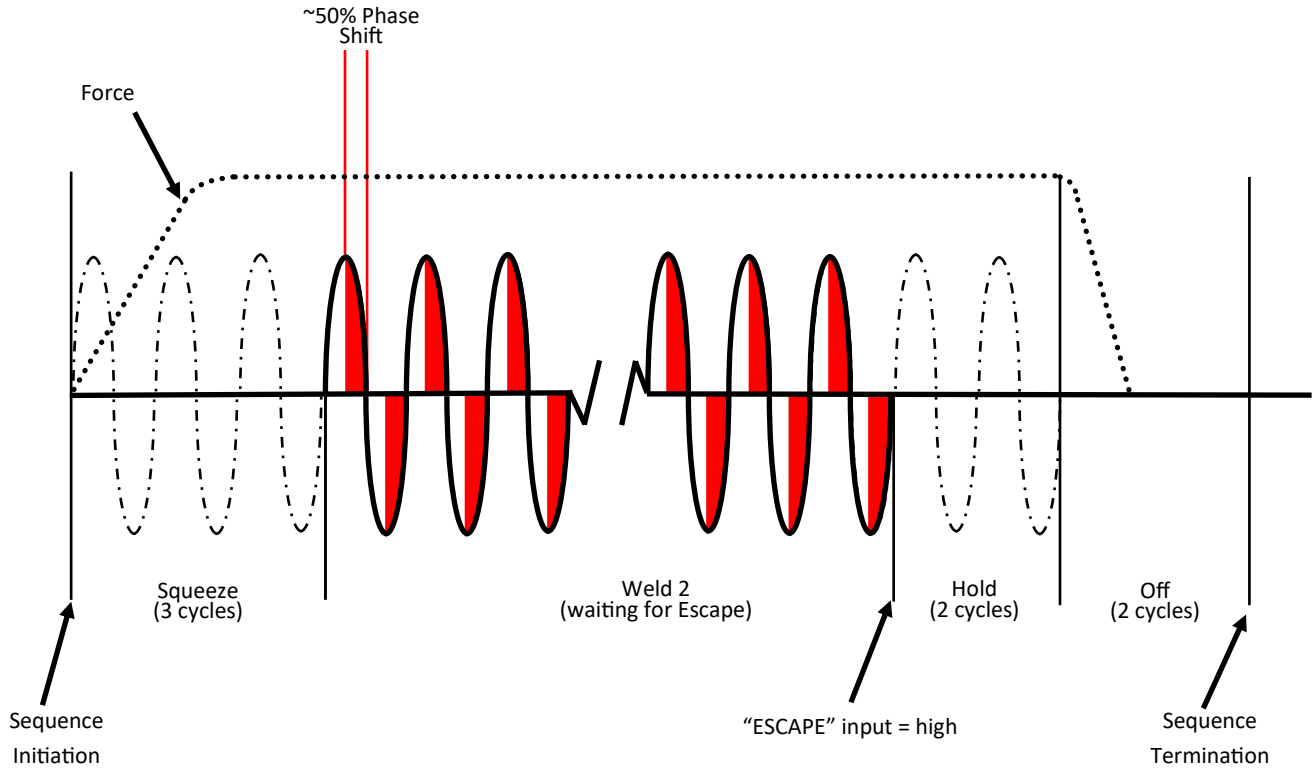

PARAMETER	SETTING
Cycle Mode	Wait Here
Beat Mode	Wait-Here
Squeeze Delay	0 cycles
Squeeze	3 cycles
Weld 1	0 cycles
Cool 1	0 cycles
Slope	0 cycles
Weld 2	99 cycles
>Mode	Phase Shift
>Heat	50 %
Cool 2	0 cycles
Hold	2 cycles
Off	2 cycles
Impulses	1 cycle

The diagram above is intended to demonstrate a resulting welding timing cycle using the attached parameters; it is not recommended as part of a functional weld schedule.

5.3.1 Worksheets—My Control Information

Filling out the following information (and keeping it readily available) may allow for future technical service of equipment to be conducted more efficiently:

Model #: EN6001

Serial #: _____

OEM/Distributer: _____

Contact #: _____

Purchase Date: _____

Hardware Connections

P1—2, Foot Switch #1 _____

P1—3, Foot Switch #2 _____

P1—4, Emergency Stop _____

P1—5, No Weld Signal _____

P1—6, Programmable Input #1 _____

P1—7, Programmable Input #2 _____

P1—8, Programmable Input #3 _____

P1—9, Programmable Input #4 _____

P1—10, Programmable Input #5 _____

P1—11, Programmable Input #6 _____

P2—2, Solenoid Valve #1 _____

P2—3, Solenoid Valve #2 _____

P2—4, Solenoid Valve #3 _____

P2—5, Programmable Output #1 _____

P2—6, Programmable Output #2 _____

P2—7, Programmable Output #3 _____

P2—8, Programmable Output #4 _____

P3 Sensing Coil ☐ Not Used ☐ Primary ☐ Secondary

5.3.1 Worksheets—Weld Schedule

Filling out the following information (and keeping it readily available) may allow for future technical service of equipment to be conducted more efficiently. Please duplicate and complete this page for each utilized schedule:

SCHEDULE #: _____

Squeeze Delay:	_____ cycles		_____ KVA	or	_____ %
Squeeze:	**_____ cycles**		**Valves:**		**_____**
Weld 1:	_____ cycles		_____ KVA	or	_____ %
Cool 1:	_____ cycles				
Slope:	_____ cycles				
Weld 2:	**_____ cycles**		**_____ KVA**	**or**	**_____ %**
Cool 2:	_____ cycles				
Impulses:	_____ cycles				
Hold:	**_____ cycles**				
Off:	**_____ cycles**				
Cycle Mode:	_____				

Comments: _____

_____

_____

_____

_____

_____

_____

_____

_____

Tap Setting: _____ Pressure: _____ Machine: _____

5.4 I/O Programming

Input/Output (Location)	Options **Default**	Description
PI1 (P1 - 6)	TT1 2nd stage Back step **PCTR**	TT1 – Transformer Temperature Limit Switch 2nd stage – FS1/FS2 activates valve closure only; 2nd Stage input initiates weld Back step – Return to previous schedule in "Successive" Cycle mode PCTR – Part counter reset
PI2 (P1 - 7)	**Edit lock** PS1 Interlock WCTR Reset	Edit lock – closed = control locked; open = control unlocked PS1 – Pressure switch signal Interlock – Signal to authorize weld; used with PO4 Interlock WCTR – Weld-per-part counter reset
PI3 (P1 - 8)	Error reset Sch. Select 1 **Stepper reset** 2nd Stage	Error reset – Clear error in order resume function Sch. Select 1 – Binary value of "one" for externally selecting schedule Stepper reset – Return stepper to "Zero" position 2nd stage – FS1/FS2 activates valve closure only; 2nd Stage input initiates weld
PI4 (P1 - 9)	Interlock Sch. Select 2 **Error Reset** (Not Used)	Interlock – Signal to authorize weld; used with PO4 Interlock Sch. Select 2 – Binary value of "two" for externally selecting schedule Error reset – Clears error in order resume function
PI5 (P1 - 10)	**Back step** Sch. Select 4 Retraction (Not Used)	Back step – Return to previous schedule in "Successive" Cycle mode Sch. Select 4 – Binary value of "four" for externally selecting schedule Retraction – Retract input command
PI6 (P1 - 11)	Stepper Reset Sch. Select 8 Edit lock **Escape**	Stepper reset – Return stepper to "Zero" position Sch. Select 8 – Binary value of "eight" for externally selecting schedule Edit lock – closed = control locked; open = control unlocked Escape – Command to escape current weld schedule/sequence
PO1 (P2 - 5)	**Any Error** Retraction Force Error Major Error	Any Error – Major or minor error is detected Retract Output – Command to retract Force Error – Pressure switch is not detecting proper pressure Major Error – Major error detected; determined by "Error Map" settings
PO2 (P2 - 6)	**AVC Error** Contactor Error Step End EOS	AVC Error – Automated Voltage Compensation is insufficient Contactor Error – SCR short; (typically connected to shunt trip) Step End – Stepper has completed its count EOS – 0.5sec signal at the end of each weld sequence
PO3 (P2 - 7)	**Current Error** Any Error Count end Water Saver	Current Error – weld current is outside of current monitoring window Any Error – Major or minor error is detected Count end – 'Max part count' has been reached Water Saver – signal turns off after a set time following the last weld
PO4 (P2 - 8)	**Step End** Current Error AVC Error Interlock	Step End – Stepper has completed its count Current Error – weld current is outside of current monitoring window AVC Error – Automated Voltage Compensation is insufficient Interlock – "Request to weld" signal; used with PI4

5.4 I/O Programming

Programmable Inputs

[TT1] Transformer Temperature Limit Switch

Requires a closed connection to FSC in order to sequence the weld schedule. An open input will result in ER15.

[2nd Stage] Second Stage

When FS1 or FS2 (First Stage) is initiated, the schedule will start and not continue onto weld until the programmable input 2nd Stage is connected to FSC.

[Back Step] Back Step

When in a successive schedule, a momentary connection to FSC input will decrement the active schedule by one. If the same closure to FSC is held for one second or longer, a sequence composed of multiple successive schedules can be returned to its start.

[Edit Lock] Edit Lock

A maintained closure to FSC input prevents parameter changes to the weld schedules as well as the configuration menu. Only the weld heat can be adjusted.

[Error Reset] Error Reset

A connection to FSC will externally clear an error.

[Escape] Escape

This input is used for two different functions:

1.) When On Error is programmed to HEADLOCK in the Config Menu, the valve outputs will not change until a momentary connection to FSC is received.

2.) When Beat Mode and Cycle Mode are both programmed to WAIT HERE and a timing cycle parameter is set to 99 cycles, the parameter essentially functions as an infinite duration. A momentary connection to FSC instructs the control to break the infinite loop and continue with the next portion of the timing cycle sequence.

[Interlock] Interlock

When initiated, the schedule will start and not continue on to weld until the programmable input Interlock is connected to FSC. If too much time passes before this input is connected, then the control will display ER16 (see Section 6.1 for more information). This input must be used in conjunction with the Interlock output.

[PCTR] Part Counter Reset

A momentary connection to FSC will reset the Part Count to zero.

5.4 I/O Programming

[PS1] Pressure Switch

When initiated, the schedule will start and not continue on to weld until the programmable input PS1 is connected to FSC. If too much time passes before this input is connected, then the control will display ER12 (see Section 6.1 for more information).

[Retraction] Retraction

Retraction configuration requires that the Retraction input and the Retraction output are both enabled. This also requires that the Retraction parameter in the Config Menu be set to either MOMENTARY or MAINTAINED. When set to MOMENTARY, a momentary connection to FSC will toggle the Retraction output state. When set to MAINTAINED, maintained closure to FSC will result in an ACTIVE Retraction output. If the control is instructed to weld when the Retraction output is not ACTIVE, ER61 will be displayed (see Section 6.1 for more information.)

[Sch. Select 1] - [Sch. Select 8] Binary Schedule Select Value

A connection to FSC denotes that value should be added to the total value of the four potential schedule select inputs in determining which schedule is the active schedule for FS1. This function also requires that the Schedule Select parameter in the Config Menu be set to EXTERNAL.

Example: If all Schedule Select inputs are connected to FSC, then the active schedule will be 1 + 2 + 4 + 8 = 15. If Sch. Select 1 and Sch. Select 4 are both connected to FSC, then the active schedule will be 1 + 4 = 5.

[Stepper Reset] Stepper Reset

A momentary connection to FSC will reset the Stepper Count value to zero.

[WCTR] Weld Counter Reset

A momentary connection to FSC will reset the Weld Count value to zero.

5.4 I/O Programming

Programmable Outputs

[Any Error] Any Error

A 24 VDC output occurs between the selected Programmable Output and SVC when any error code is displayed.

[AVC Error] Automatic Voltage Compensation Error

A 24 VDC output occurs between the selected Programmable Output and SVC when ER32 is displayed (see Section 6.1 for more information).

[Contactor Error] Contactor Error

A 24 VDC output occurs between the selected Programmable Output and SVC when ER13 is displayed (see Section 6.1 for more information).

[Count End] Part Counter End

A 24 VDC output occurs between the selected Programmable Output and SVC when ER25 is displayed (see Section 6.1 for more information).

[Current Error] Current Error

A 24 VDC output occurs between the selected Programmable Output and SVC when ER19, ER20, ER21, or ER22 is displayed (see Section 6.1 for more information).

[EOS] End of Sequence

A momentary 24 VDC output occurs between the selected Programmable Output and SVC when either an unchained schedule or the final schedule of a chained/successive sequence is complete.

[Force Error] Force Error

A 24 VDC output occurs between the selected Programmable Output and SVC when ER60 is displayed (see Section 6.1 for more information).

[Interlock] Interlock

A 24 VDC output occurs between the selected Programmable Output and SVC when ER64 is displayed (see Section 6.1 for more information). This output must be used in conjunction with the Interlock input.

[Major Error] Major Error

A 24 VDC output occurs between the selected Programmable Output and SVC when an error that is programmed to MAJOR in the Error Map is displayed (see Error Map in Section 5.2.3).

5.4 I/O Programming

[Retraction] Retraction

A 24 VDC output occurs between the selected Programmable Output and SVC when the Retraction input is connected to FSC either momentarily (Retraction set to MOMENTARY in the Config Menu) or continuously (Retraction set to MAINTAINED in the Config Menu). Must be used in conjunction with Retraction input. This output must be active for welding to proceed.

[Step End] Step End

A 24 VDC output occurs between the selected Programmable Output and SVC when the stepper function is enabled and the step count has reached the programmed value for the particular step.

[Water Saver] Water Saver

A 24 VDC output occurs between the selected Programmable Output and SVC for as long as is programmed for Water Saver in the Config Menu after input to FS1 or FS2 has been removed.

6.1 Error Codes

Note: All error defaults are set to “Minor error”. Error handling should be set under the configurations menu and by utilizing the “Any Error”, “Contactor Error”, and “Major Error” options available for the programmable outputs in the I/O Map.

ERROR CODE

1 Configuration error
Invalid data in the ‘Config’ menu. Review data range if programming is being written by an external device such as a PLC. If the control is being programmed manually, reset the ‘Config’ programming to default by using the “Clear” function (see section 5.2.3).

2 Calibration error
Invalid data in the ‘Calibration’ menu. Review data range if programming is being written by an external device such as a PLC. If the control is being programmed manually, reset the ‘Calibration’ programming to default by using the “Clear” function (see section 5.2.3).

3 Schedule error
Invalid data in the ‘Schedule’ menu. Review data range if programming is being written by an external device such as a PLC. If the control is being programmed manually, reset the ‘Schedule’ programming to default by using the “Clear” function (see section 5.2.3).

4 Use Schedule error
Invalid data in the ‘Use Schedule’ menu. Review data range if programming is being written by an external device such as a PLC. If the control is being programmed manually, select a new active schedule from the ‘Use Schedule’ screen (see section 5.2.2).

6 Counter error
Invalid data in the ‘Counter’ menu. Review data range if programming is being written by an external device such as a PLC. If the control is being programmed manually, reset the ‘Counter’ programming to default by using the “Clear” function (see section 5.2.3).

7 Stepper error
Invalid data in the ‘Stepper’ menu. Review data range if programming is being written by an external device such as a PLC. If the control is being programmed manually, reset the ‘Stepper’ programming to default by using the “Clear” function (see section 5.2.3).

8 I/O Map error
Invalid data in the ‘I/O Map’ menu. Review data range if programming is being written by an external device such as a PLC. If the control is being programmed manually, reset the ‘I/O Map’ programming to default by using the “Clear” function (see section 5.2.3).

9 E-Stop error
The input is not seeing a closed signal from the Emergency Stop Switch. If this feature is unused, insert a jumper from FSC to ES1. If the feature is being utilized, verify that external E-Stop is functioning appropriately.

10 TC1 error
The ’TLS’ input on the power board is not seeing a closed signal from the contactor’s Thermal Limit Switch. If this feature is unused, insert a jumper between the two TLS connections on the power board. If the feature is being utilized, verify that the SCR is not overheating.

11 No Weld error
The input is not seeing a closed connection from the external “No Weld” circuit to FSC. If this feature is unused, insert a jumper from FSC to NW1. If the feature is being utilized, verify that external circuit is functioning appropriately.

6.1 Error Codes

ERROR CODE	
12	PS1 error The input is not seeing a closed connection from the external pressure switch to FSC. If this feature is unused, program 'PI2' to another option or insert a jumper from FSC to PS1 programmable input. If the feature is being utilized, verify that valve and pressure switch are functioning appropriately.
13	SCR short Check SCR, weld transformer wiring, and control wiring.
14	Second Stage error Control has timed out waiting for 2nd Stage input. Verify connection and signal to 2nd Stage programmable input.
15	TT1 Error The input is not seeing a closed signal from the Transformer Thermal Limit Switch. If this feature is unused, program TT1 programmable input to another option. If the feature is being utilized, verify that the transformer is not overheating.
16	Interlock Error Control has timed out waiting for Interlock input. If this feature is unused, program Interlock programmable input to another option. If the feature is being utilized, verify that the external weld interlock is functioning appropriately.
19	High Current 1 The control measured a higher current for Weld1 than the programmed upper limit. Verify that the impedances are normal and/or consider changing the programmed value under the 'Edit Schedule' menu.
20	Low Current 1 The control measured a lower current for Weld1 than the programmed lower limit. Verify that the impedances are normal and/or consider changing the programmed value under the 'Edit Schedule' menu.
21	High Current 2 The control measured a higher current for Weld2 than the programmed upper limit. Verify that the impedances are normal and/or consider changing the programmed value under the 'Edit Schedule' menu.
22	Low Current 2 The control measured a lower current for Weld2 than the programmed lower limit. Verify that the impedances are normal and/or consider changing the programmed value under the 'Edit Schedule' menu.
23	High Voltage The AC line voltage is measured above the programmed upper limit under the "voltage monitor" parameter. Check the AC line voltage and/or adjust the parameter under the 'Config' menu.
24	Low Voltage The AC line voltage is measured below the programmed lower limit under the "voltage monitor" parameter. Check the AC line voltage and/or adjust the parameter under the 'Config' menu.
25	Counter end Reset the counter. If this feature is not being utilized, consider disabling it under the 'Edit Counter' menu.
26	Stepper end Reset Stepper. If this feature is not being utilized, consider disabling it under the 'Stepper' menu.

6.1 Error Codes

ERROR CODE

27 High Pulse Width1
The pulse width for Weld 1 was above the programmed upper limit. Check transformer or secondary circuit to ensure that current is not shunting and/or adjust parameter under the 'Edit Schedule' menu.

28 Low Pulse Width1
The pulse width for Weld 1 was below the programmed lower limit. Check transformer or secondary circuit and/or adjust parameter under the 'Edit Schedule' menu.

29 High Pulse Width2
The pulse width for Weld 2 was above the programmed upper limit. Check transformer or secondary circuit to ensure that current is not shunting and/or adjust parameter under the 'Edit Schedule' menu.

30 Low Pulse Width2
The pulse width for Weld 2 was below the programmed lower limit. Check transformer or secondary circuit and/or adjust parameter under the 'Edit Schedule' menu.

31 Tip dress pre-warn
Dress tip

32 AVC error
Check AC line voltage and/or adjust the parameters under the 'Config' menu.

33 Starts/Retract @ RST
FS1, FS2, or Retract programmable input was activated when the control was powered on. Check the signals to ensure they are working properly.

34 SYNC error
The control cannot synchronize with the AC line voltage. Check AC line connections and stability.

35 PNW error
The front panel's 'Weld/No Weld' button is currently set to 'No Weld'.

36 DC Safety Relay error
The safety relay for the DC valves is not properly corresponding with the input commands. This could imply a hardware issue with the control.

37 AC Safety Relay error
The safety relay for the AC valves is not properly corresponding with the input commands. This could imply a hardware issue with the control.

38 Constant Current with No Coil
The configuration menu shows "no coil" for current feedback, but the weld schedule being run has Constant Current enabled.

44 Pre-low current1
The control measured a lower current for Weld1 than the programmed lower pre-limit. Verify that the impedances are normal and/or consider changing the programmed value under the 'Edit Schedule' menu.

46 Pre-low current2
The control measured a lower current for Weld2 than the programmed lower pre-limit. Verify that the impedances are normal and/or consider changing the programmed value under the 'Edit Schedule' menu.

59 Retract input closed
Retraction mode is set to "Momentary" which programs the control to expect a short toggle to activate a response. The momentary toggle has remained high for 10 seconds or more. Check the signal to PI5 to ensure proper function.

60 PS1 not ready
Control is waiting for a closed connection from external pressure switch to PS1 programmable input.

6.1 Error Codes

ERROR CODE	
61	Retract not ready Control is waiting for a closed connection from FSC to Retract programmable input
62	2nd Stage not ready Control is waiting for a closed connection from FSC to 2nd Stage programmable input for weld initiation.
64	Interlock not ready Control is waiting for a closed connection from FSC to Interlock programmable input.

6.2 Non-Error Code Issues

TROUBLE	POSSIBLE CAUSES	REMEDIES
Power Switch ON but no display	1. Fuse F1 or F2 control fuse or F6 on Power PCB1 blown 2. Defective Circuit Breaker 3. Defective Power Supply PS1 4. Defective Timer	1. Replace Fuses. 2. Replace Circuit Breaker. 3. Replace Power Supply PS1. 4. Replace Timer.
Control will not initiate	1. Initiation switch(es) defective 2. Loose or broken wire(s) at initiation switch(es) 3. Fuses F7 - F9 valve fuses blown. 4. Defective Timer or Power PCB 5. No data in selected schedule	1. Replace switch(es). 2. Check for loose or broken wire(s) at initiation switch(es) and at FS1, FS2. 3. Replace fuses. 4. Replace Timer or Power PCB. 5. Select correct schedule or program schedule. 6. Check valve solenoid coil.
Control initiates; WELD LED on; Power PCB comes on, but electrodes do not close.	1. Solenoid valve circuit miswired or broken wires 2. Hydraulic (or air) line blocked 3. Bad Valve	1. Check terminals SV1-3, or SV1-3 VL1-2 on PCB2 and associated wiring (see Wiring Diagram). 2. Check pressure. 3. Repair or replace air accessories.
Control does not complete a sequence, but welder head or arms close in response to first stage.	1. 2nd stage is not closing. 2. Defective Timer	1a. Check 2nd stage switch and connections. 1b. Check for proper operation of Pilot switch. Verify First Stage closes before Second Stage. 2. Replace defective Timer.
Control initiates but stays in SQUEEZE.	1. Pressure Switch and/or 2nd stage and/or interlock is not closing. 2. Defective Timer	1a. Check for defective or malfunctioning Pressure Switch and set point and/or 2nd stage and/or interlock. 1b. If feature is not used, remove from I/O Map. 2. Replace Timer.
Control initiates and sequences properly, but solenoid valve chatters.	1. Solenoid valve coil 2. Defective Timer or AC Valve PCB2 .	1a. Check that AC valve supply voltage is not varying below tolerance, -15%. 1b. Check if valve coil is proper voltage. 1c. Insufficient air pressure 1d. Loose connections in valve wiring 2. Replace Timer or PCB2.

6.2 Non-Error Code Issues

TROUBLE	POSSIBLE CAUSES	REMEDIES
Control sequences but will not weld.	1. External Weld/No Weld Switch or WELD/NO WELD switch on Front Panel of control. 2. Welding transformer not connected 3. Welding transformer secondary open 4. Defective Power PCB 5. Defective Control/Display PCB	1a. Check both for proper operation and/ or loose wires on NW1 & FSC. 1b. If no external Weld/No Weld Switch is used, put jumper across NW1 & FSC. Connect Welding Transformer to H1 and H2 to lugs in the control. 2. Check Tap Switch and Plug on transformer if used. 3. Check for corroded or open connections. Be sure welding electrodes close on work. 4. Replace Power PCB. 5. Replace Timer.
Weld too cool	1. Line voltage drop 2. Excessive pressure at electrodes 3. WELD count too short or current too low 4. Excessive tip “mushrooming”	1a. KVA demand for welding transformer too high for input power line 1b. Check line voltage. 2. Check air system regulator or setting. 3. Increase WELD count or Phase shift from current setting.
Weld too small	1. PERCENT CURRENT too low 2. Electrode face too small	1. Increase PERCENT CURRENT. 2. Select correct electrode face diame-
“HOT” Welds	1. Insufficient air pressure. 2. WELD count set too high 3. PERCENT CURRENT or current set too high 4. Electrode diameter too small	1. Check air supply and accessories. 2. Reduce Weld count duration. 3. Decrease Percent Current or Current. 4. Dress or replace tip with proper size.
Inconsistent Welds	1. Varying air pressure 2. Work not square with electrodes 3. Poor part fit-up. 4. Dirty material to be welded. 5. Loose connection. 6. Material not to specification	1. Check air supply and accessories. 2. Check welding fixtures setup or electrode alignment. 3. Check parts for proper fit-up. 4. Work should be free from excessive dirt, paint and oxides. 5. Check all terminal and/or lug connections inside the cabinet. 6. Check material.

6.2 Non-Error Code Issues

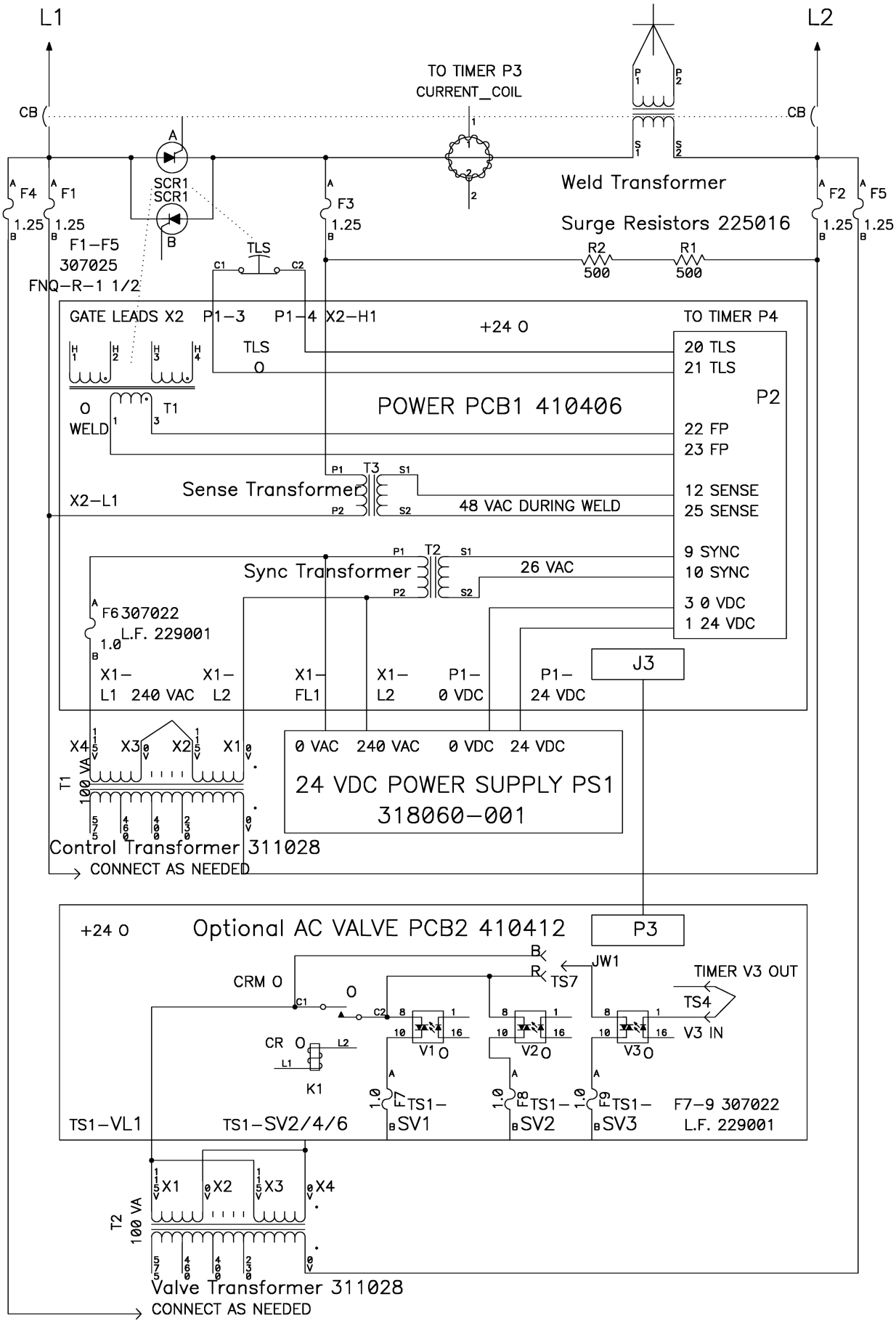

6.3 Noise Suppression

Means of electrical noise suppression may be required to prevent radiation of RF noise. Such noise is caused by transient peaks, which are transmitted by AC line or valve outputs, motor controls, etc.

Noise should be removed at its source. If this is not reasonable, noise suppression devices must be placed as close as possible to device.

All inductive devices such as valves, solenoids, and other switching elements (or their connecting wires), which are situated in the vicinity of control, require noise suppression or physical isolation with barriers.

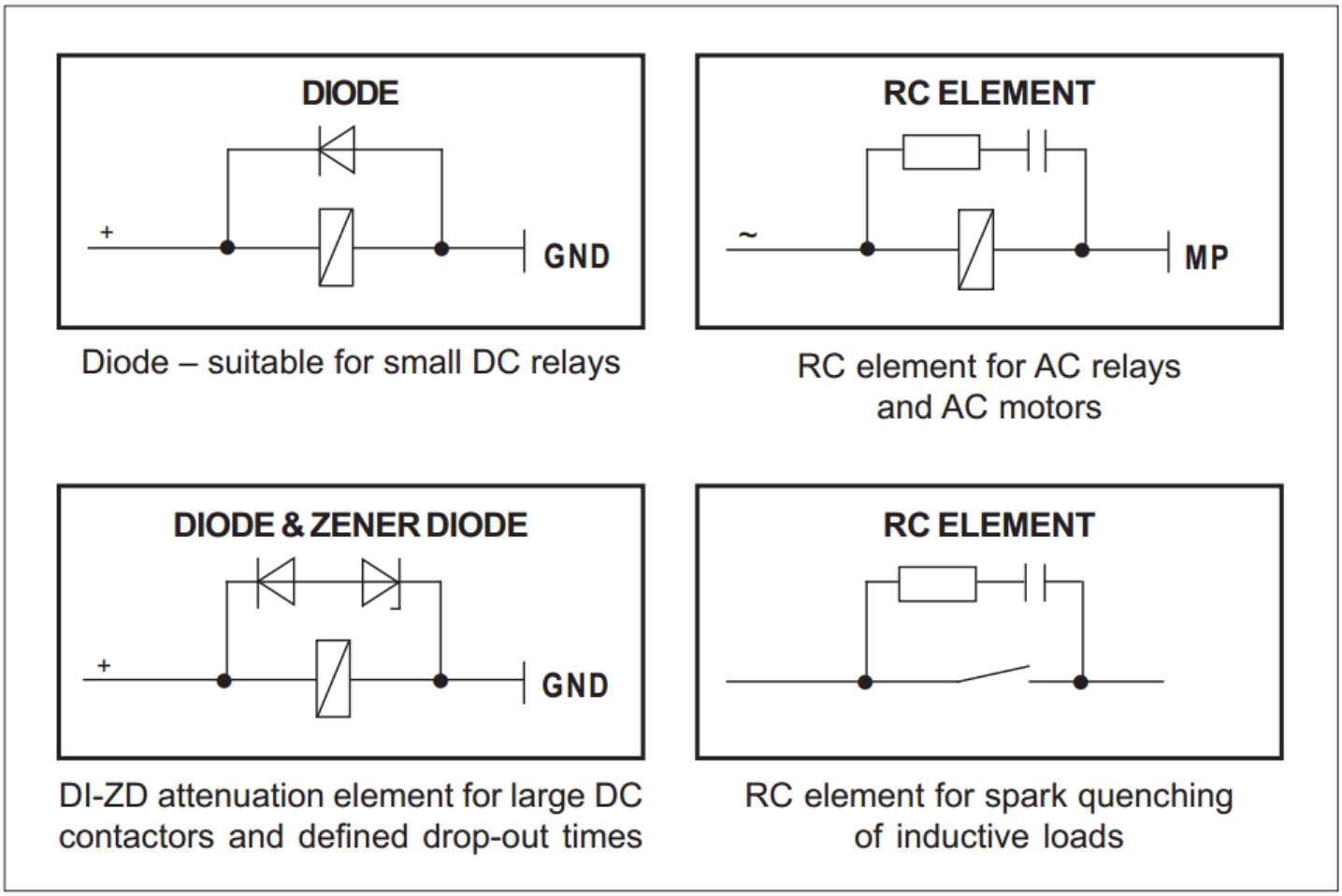

6.4 Warranty and Service Policy

Warranty:

ENTRON warrants that any equipment manufactured by it for the Purchaser (the "Product") will be free from defects in materials and workmanship and will comply with ENTRON's quoted specification and/or schematic design for the Product (the "Designed Use"). ENTRON further warrants that, if properly and normally used and maintained, the Product will be free of defects for the Warranty Period. The Warranty Period shall run from the date of original purchase of the Product to the earlier of (i) eighteen (18) months after the date of shipment from the ENTRON site or (ii) twelve (12) months after the Product is placed in service, whichever occurs first (the "Warranty Period"). The Warranty Period applies unless superseded by a different term that is expressly accepted by ENTRON in writing in ENTRON's order acknowledgement document. During the Warranty Period, ENTRON will remedy any such defects and will remedy any non-compliance with the quoted specification and/or schematic design by repair or replacement (at ENTRON's option) of the Product or parts to the Product.

Terms and Conditions of Warranty:

The warranty shall be limited to the warranty of materials and workmanship and compliance with ENTRON's Designed Use for the Product and ENTRON makes no other warranties. When the Product is sold to be used in combination with other equipment not of ENTRON's design or manufacture, the warranty is limited to the Product and not the other equipment.

EXCEPT FOR THE WARRANTY SET FORTH ABOVE IN THE FIRST PARAGRAPH, (A) NEITHER ENTRON NOR ANY PERSON ON ENTRON'S BEHALF HAS MADE OR MAKES ANY EXPRESS OR IMPLIED REPRESENTATION OR WARRANTY WHATSOEVER, EITHER ORAL OR WRITTEN, INCLUDING ANY WARRANTIES OF MERCHANTABILITY, FITNESS FOR A PARTICULAR PURPOSE, TITLE, OR NON-INFRINGEMENT OR PERFORMANCE OF PRODUCTS OR PRODUCTS TO STANDARDS SPECIFIC TO THE COUNTRY OF IMPORT, WHETHER ARISING BY LAW, COURSE OF DEALING, COURSE OF PERFORMANCE, USAGE OF TRADE OR OTHERWISE, ALL OF WHICH ARE EXPRESSLY DISCLAIMED, AND (B) THE PURCHASER ACKNOWLEDGES THAT IT HAS NOT RELIED UPON ANY REPRESENTATION OR WARRANTY MADE BY ENTRON, OR ANY OTHER PERSON ON ENTRON'S BEHALF, EXCEPT AS SPECIFICALLY PROVIDED IN THE FIRST PARAGRAPH.

This warranty does not apply to any Product that (i) has been subjected to abuse, misuse, neglect, negligence, accident, improper testing, improper installation, improper storage, improper handling, abnormal physical stress, abnormal environmental conditions or use contrary to any instructions issued by ENTRON; (ii) has been reconstructed, repaired or altered by persons other than ENTRON or its authorized representative; (iii) has been used or integrated into any machine or equipment for any use other than a Designed Use; or (iv) has been used with any third-party products, hardware or product that has not been previously approved in writing by ENTRON.

For replacement parts supplied by ENTRON, the Warranty Period for said replacement parts is limited to the Warranty Period for the original Product in which said replacement parts are installed.

With respect to any of the equipment used within the Product, but not manufactured by ENTRON, ENTRON will transmit to the Purchaser the benefit of any warranties or conditions it receives from the manufacturer or supplier of said equipment which are capable of transmission. ENTRON itself gives no warranty hereunder in respect of any such equipment.

To obtain repairs or replacement parts under this warranty, the defective part must be returned, prepaid, to any ENTRON site (Mexico, United Kingdom or United States) prior to the end of the Warranty Period. Please send your repair to the attention of "Service" with a description of the problem you are experiencing, contact person and phone number.

6.3 Warranty and Service Policy

Limitations of the Warranty:

The damages for which ENTRON is liable in respect of any one cause of action shall not exceed the sum equal to 100% of the purchase price specified in the equipment purchase agreement.

OTHER THAN ACTUAL DAMAGES AS LIMITED BY THE PRIOR PARAGRAPH, IN NO EVENT SHALL ENTRON OR ITS REPRESENTATIVES BE LIABLE FOR CONSEQUENTIAL, INDIRECT, INCIDENTAL, SPECIAL, EXEMPLARY, PUNITIVE OR ENHANCED DAMAGES, LOST PROFITS OR REVENUES OR DIMINUTION IN VALUE, ARISING OUT OF OR RELATING TO ANY CLAIMS RELATED TO THE PRODUCT, REGARDLESS OF (A) WHETHER SUCH DAMAGES WERE FORESEEABLE, (B) WHETHER OR NOT PURCHASER WAS ADVISED OF THE POSSIBILITY OF SUCH DAMAGES AND (C) THE LEGAL OR EQUITABLE THEORY (CONTRACT, TORT OR OTHERWISE) UPON WHICH THE CLAIM IS BASED, AND NOTWITHSTANDING THE FAILURE OF ANY AGREED OR OTHER REMEDY OF ITS ESSENTIAL PURPOSE. WITHOUT LIMITING THE GENERALITY OF THE FOREGOING, THE PURCHASER ASSUMES ALL RISK AND LIABILITY FOR THE RESULTS OBTAINED BY THE USE OF ANY PRODUCTS IN THE PRACTICE OF ANY PROCESS, WHETHER IN TERMS OF OPERATING COSTS, GENERAL EFFECTIVENESS, SUCCESS OR FAILURE, AND REGARDLESS OF ANY ORAL OR WRITTEN STATEMENTS MADE BY ENTRON OR ITS AUTHORIZED REPRESENTATIVE, BY WAY OF TECHNICAL ADVICE OR OTHERWISE, RELATED TO THE USE OF THE PRODUCT.

Warranty and Transferability of Software:

All software and/or software documentation (collectively, the “Software”), whether supplied to the Purchaser as a component of the Product or supplied as a stand-alone Product, shall be considered to be “licensed” rather than “sold” to the Purchaser, and the Purchaser shall be licensed to use the Software under the following terms unless superseded by a different term that is expressly accepted by ENTRON in writing in ENTRON’s order acknowledgement document.

ENTRON or ENTRON’s licensor retains ownership of the Software and applicable copyrights, patents and trade secrets.

- The Purchaser, as licensee, is granted a limited, non-exclusive, royalty-free license to use the Software during the term permitted by ENTRON in writing (and perpetually for any Software embedded into the Product).
- The Purchaser may not reverse engineer or modify the Software (except to customize the Product for the Purchaser’s operations, as authorized by ENTRON in writing, provided that any such modifications are and shall remain the property of ENTRON), remove it from the Product, or install the Software into products other than the Product.
- The Purchaser may not sublicense the Software, and this license terminates upon transfer of the Product to any third party.

All rights in the Software not expressly granted hereunder are reserved to ENTRON. The rights granted herein may be terminated by ENTRON upon prior written notice to the Purchaser if the Purchaser is in default of these standard terms.

ENTRON Document 750003-0414