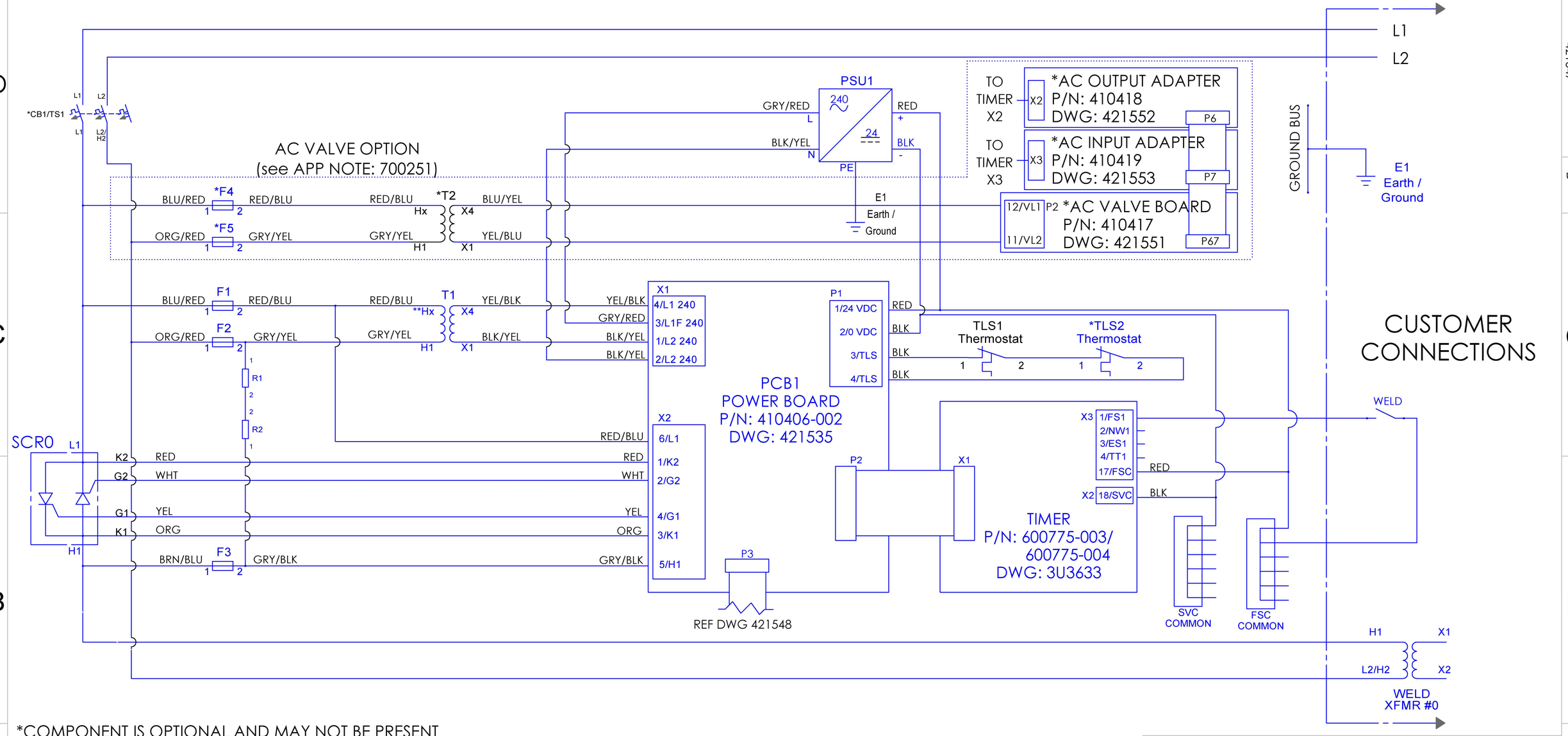

*COMPONENT IS OPTIONAL AND MAY NOT BE PRESENT
** SEE IMAGE 1: T1 SECONDARY VOLTAGE SHOULD NOT EXCEED 264VAC; IF LINE VOLTAGE DOES NOT MATCH ANY OPTIONS IN IMAGE 1, SELECT THE NEXT HIGHER VALUE.

**IMAGE 1: CONTROL CONFIGURATION FOR LINE VOLTAGE

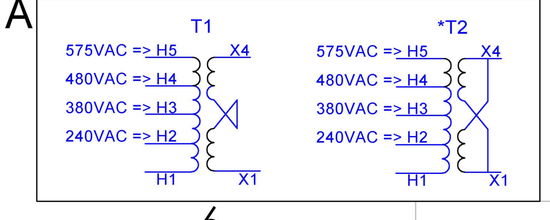

TABLE 1: FUSE AND RESISTOR VALUES

COMPONENT	VALUE / ATING
F1	1.25A@600VAC CLASS CC
F2	1.25A@600VAC CLASS CC
F3	1.25A@600VAC CLASS CC
*F4	1.25A@600VAC CLASS CC
*F5	1.25A@600VAC CLASS CC
R2 / *R2-HWR	500Ω@100w / 90Ω@680W
R1 / *R1-HWR	500Ω@100W / 90Ω@680W

TABLE 2: IDLE VOLTAGE VALUES

TEST POINT 1	TEST POINT 2	VOLTAGE
T1-H1	T1-**Hx	AC LINE VOLTAGE
PCB1-X1-2	PCB1-X1-4	220-264 VAC
*PCB2-P2-12	*PCB2-P2-11	110-120VAC
SCR0-L1	SCR0-H1	AC LINE VOLTAGE
PSU1 -	PSU1 +	24VDC

ENTRON

DRAWN BY	DATE	CHECKED BY	DATE
EJP	12/21/2021		
TOLERENCE	SCALE	DESCRIPTION	
ANGLES: ±1/2° DECIMALS: ± .010 FRACTIONS: ±1/64	None	EN7000v2 WIRING DIAGRAM USA	
SHEET NUMBER		DRAWING NUMBER	REV
1 OF 1		421547	E

DRAWING NUMBER 421547
REV D