1200A CONTACTOR ASSEMBLY
P/N 600598-010

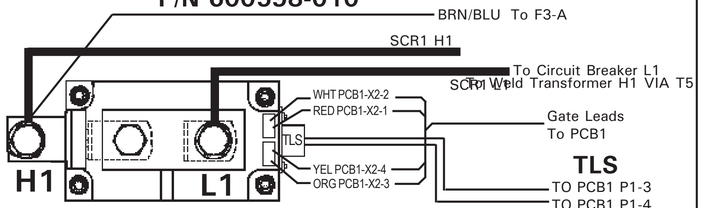

300A AIR-COOLED CONTACTOR ASSEMBLIES
P/N 600520

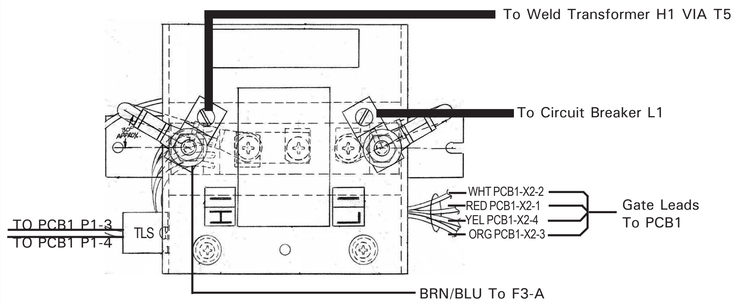

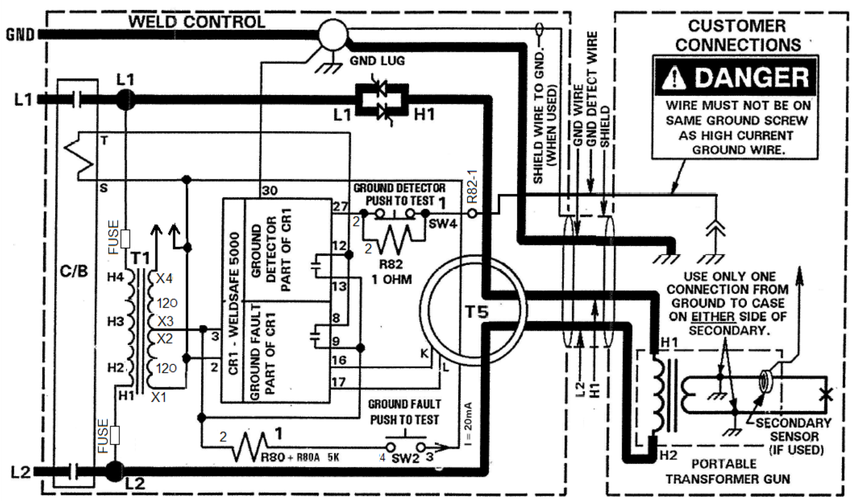

GF/TRANSGUN USAGE NOTES

For GF opperation see Application Note 700252.

For guns with Retraction see section 5.2.3 of manual 700230.

For guns that require Beat During Squeeze see section 5.2.3 of manual 700230.

PCB 410412 must be used with guns with 24 - 120 VAC valves. (Standard with GF Controls)

GF Relay CR1 600695 must have S3,S4 & S8 closed. (Located behind CR1 front plate)

Gun must have a high current bonding wire attached to gun frame. A second smaller gauge wire must be connected to a mechanically different point on the gun frame, that no other wires share, and wired to R82-1.

H1 & H2 welding transformer primary connections & Push To Test (SW2) lead are the only 3 conductors that should pass thru the ground faullt current transformer (T5)

The ground fault test switch (SW2) and ground fault continuity switch (SW4) push to test buttons should be used periodically to test CR1 opperation. The test buttons on face of CR1 need not to be used.

GROUND FAULT ADDITIONS
D CABINET
WITH 1200A/300A SCR

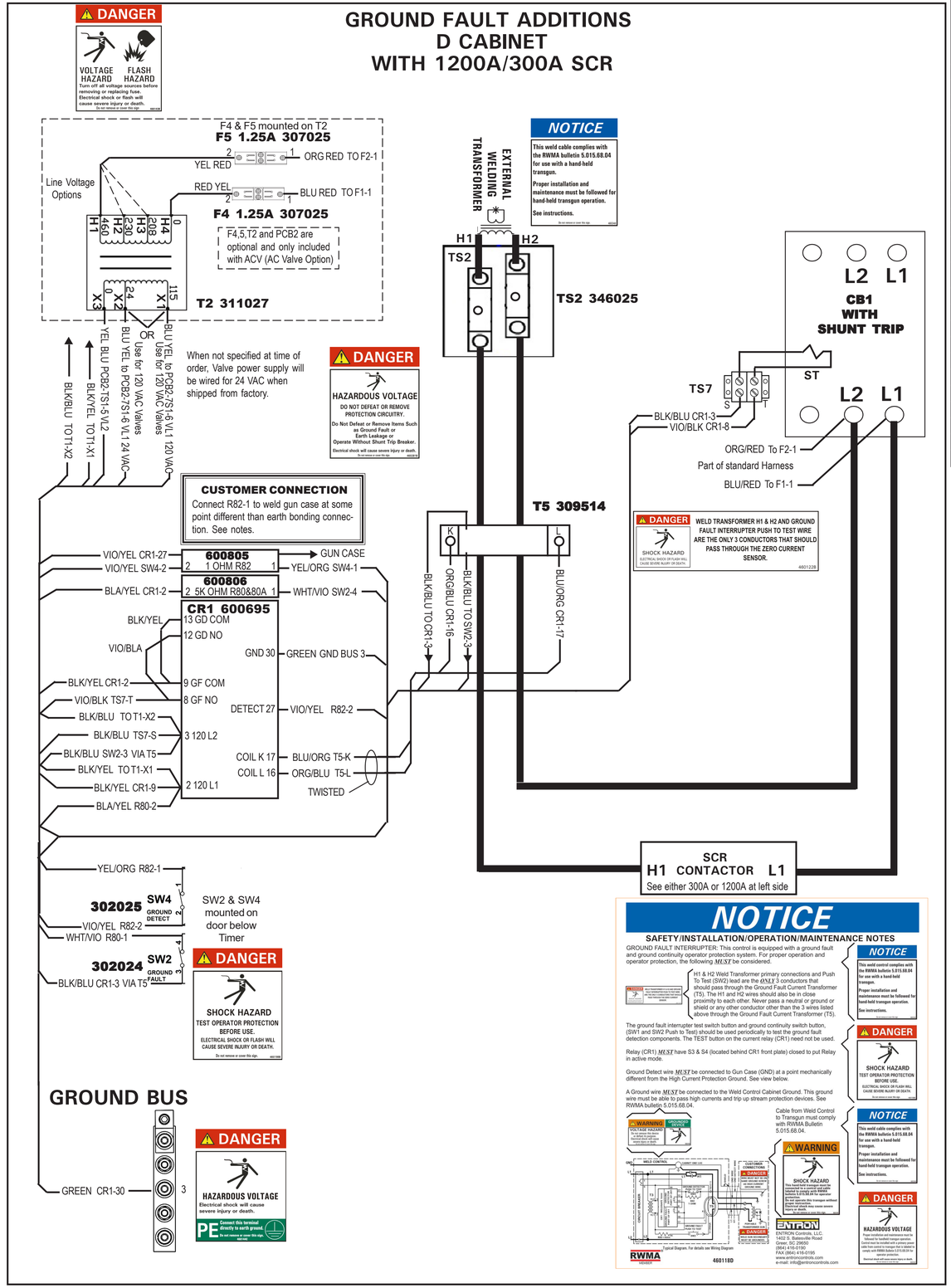

EN6001 GROUND FAULT CONTROL
D CABINET 300 & 1200A SCR
ADDITIONAL GF PARTS

QTY	Part #	Description
1	308010	308010 FUSE HOLDER;ONE POLE;(SING.BAF
2	307025	FUSE;1 1/4A;TIME DELAY;13/32 X 1.5
1	311027	XFMR;POWER;100VA;208/230/380/460:115/24V
1	600695	Assembly, Ground Fault Relay, 60Hz, Weldsafe 5000
1	600805	Resistor, Assem din rail, 2W, 10%, 5K
1	600806	Resistor, Assem din rail, 1W, 5%, 1 ohm
1	309514	Ground Fault Current Coil
1	335017	Terminal Block, 2 Pole, 20A
1	318001-002	5" of 318001 Din Rail
2	318030	End Stop, Din Rail
1	346025	2 pole terminal block
1	302024	Switch Assem, Oil Tight, Push Button, Red, N/O, 22mm Consists of: 302022, 302023, 302019
1	302025	Switch Assem, Oil Tight, Push Button, Red, N/C, 22mm Consists of: 302020, 302023, 302019
1	322596	Harness Assembly,Components, EN6001, L or T Cab/GF
1	410412	EN6001,ADD ON, BD AC VALVES
1	460118	LABEL;GF SAFETY NOTICE;8X9.5
1	460122	LABEL;DANGER;GF COIL
1	460143	LABEL;DANGER VOLT&FLASH HAZ.
1	460172	LABEL; SHUNT TRIP TERM. STRIP
1	460198	LABEL;DANGER;SHOCK HAZARD TEST
1	460251	LABEL;FUSE;FNQ-R-1/4 OR KLDR
1	460281	LABEL;DANGER;DO NOT OPERATE
1	460339	LABEL:GROUND FAULT FOR EN1701 'T' CAB
1	460344	LABEL;NOTICE;THIS CONTROL...

See also:
Schematic 421533-001
Transgun Manual 700252
EN6001 Manual 700230

REV	AUTH	DESCRIPTION	DRAWN BY DATE	CHK'D BY DATE
—				

460064

ENTRON

SCALE	DATE	DRAWN BY	CHK'D BY	APPROVED BY
none	10/2/20	DCS	DCS	DCS

TOLERANCE UNLESS SPECIFIED
ANGLES: ± 1/2°
DECIMALS: ± .010
FRACTIONS ± 1/64

REVISED: REV LTR | APPROVED BY | DATE

Wiring Diagram, EN6001, 'D' Cabinets
GF ADDITIONS

NEXT ASSM/USED ON	DRAWING NUMBER	REV
EN6001 SERIES	421561	orig

DRAWING NUMBER 421561 — REV orig